Doc. no. LEC-OM00604

Operation Manual

PRODUCT NAME

Step Motor Controller (Servo / 24VDC)

MODEL/ Series

LECP6 Series

SMC Corporation

SMC

Contents

1. Safety Instructions 4

2. Product Outline 6

2.1 Product features 6
2.2 How to Order 7
2.3 Product configuration 8
2.4 Start up Procedures 9
(1) Confirmation of the package content 9
(2) Installation 9
(3) Wiring and connection 9
(4) Power ON alarm (error) 10
(5) Operation pattern setting 10
(6) Trial run (actuator adjustment) 10

3. Product Specifications 11

3.1 Basic specifications 11
3.2 Parts description 12
3.3 Outside dimension diagram 13
(1) Screw mount type (LECP6**-*) 13
(2) DIN rail mount type (LECP6**D-*) 13
3.4 How to install 14
(1) How to install 14
(2) Ground wire connection 14
(3) Installation location 15

4. External Wiring Diagram 16

4.1 CN1: Power connector 16
4.2 CN2: Motor power connector and CN3: Encoder connector 16
4.3 CN4: Serial I/O connector 16
(1) Connection with the teaching box 16
(2) Connection with a PC 17
4.4 CN5: Parallel I/O connector 17

5. CN1: Power supply plug 18

5.1 Power supply plug specifications 18
5.2 Electric wire specifications 18
5.3 Wiring of power supply plug 19
(1) Wiring of the power supply 19

(2) Wiring of the stop switch 19
(3) Wiring of the lock release 19
5.4 Stop circuits 20
(1) Example circuit 1- Single controller with teaching Box 20
(2) Example circuit 2 - multiple controllers (Stop relay contact (1)) 21
(3) Example circuit 3 - Motor power shutdown (relay contact (2)) 22

6. CN5: Parallel I/O Connector 23

6.1 Parallel I/O specifications 23
6.2 Parallel I/O type (NPN/PNP type) 23
(1) Parallel I/O input circuit (same for both NPN and PNP type) 23
(2) Parallel I/O output circuit 23
6.3 The parallel I/O signal is detailed. 24
6.4 Parallel I/O Wiring Example 27

7. Setting Data Entry 28

7.1 Step data.....28
7.2 Basic parameter.....31
7.3 Return to origin parameter 33

8. Return to origin 34

8.1 Return to origin.....34
8.2 Positioning operation.....34
8.3 Pushing operation 35
(1) Pushing operation is successfully performed. 35
(2) Pushing operation is failed (pushing the air). 35
(3) Movement of the workpiece after the completion of the pushing process ...35
8.4 Controller input signal response time 36
8.5 Methods of interrupting operation 36

9. Operation (example) 37

9.1 Positioning operation.....37
9.2 Pushing operation 38

10. Operation instruction.....39

10.1 Outline of the operation instruction.....39
10.2 Procedures with the Parallel I/O.....39
[1] Power on → Return to origin 39
[2] Positioning operation.....40
[3] Pushing operation 41
[4] HOLD 42
[5] Reset.....42

[6] Stop....42
[7] Area output....43

11. Option....44

11.1 Actuator cable (5m or less)....44
11.2 Actuator cable (8-20m)....44
11.3 Actuator cable for with lock (5m or less)....45
11.4 Actuator cable for with lock (8-20m)....45
11.5 I/O Cable....46
11.6 Controller setting kit....46
11.7 Teaching box....47

12. Alarm Detection....48

12.1 Parallel output for the alarm group....48
12.2 Alarm details....49

13. Wiring of cables/Common precautions....53

14. Electric actuators/Common precautions....54

14.1 Design and selection....54
14.2 Mounting....55
14.3 Handling....56
14.4 Operating environment....57
14.5 Maintenance....58
14.6 Precautions for actuator with lock....58

15. Controller and its peripheral devices /Specific product precautions....59

15.1 Design and selection....59
15.2 Handling....59
15.3 Installation....60
15.4 Wiring of cables/Common precautions....61
15.5 Power supply....61
15.6 Grounding....61
15.7 Maintenace....62

16. Troubleshooting....63

16.1 Operation trouble....63
16.2 Position/Speed trouble....65

LECP6 Series / Controller
1. Safety Instructions

These safety instructions are intended to prevent hazardous situations and/or equipment damage.
These instructions indicate the level of potential hazard with the labels of “Caution,” “Warning” or “Danger.”
They are all important notes for safety and must be followed in addition to International Standards (ISO/IEC), Japan Industrial Standards (JIS)*1) and other safety regulations*2).

*1) ISO 4414: Pneumatic fluid power -- General rules relating to systems
ISO 4413: Hydraulic fluid power -- General rules relating to systems
IEC 60204-1: Safety of machinery -- Electrical equipment of machines (Part 1: General requirements)
ISO 10218-1992: Manipulating industrial robots -- Safety
JIS B 8370: General rules for pneumatic equipment.
JIS B 8361: General rules for hydraulic equipment.
JIS B 9960-1: Safety of machinery – Electrical equipment for machines. (Part 1: General requirements)
JIS B 8433-1993: Manipulating industrial robots - Safety. etc.
*2) Labor Safety and Sanitation Law, etc.

Caution	**Caution** indicates a hazard with a low level of risk which, if not avoided, could result in minor or moderate injury.
Warning	**Warning** indicates a hazard with a medium level of risk which, if not avoided, could result in death or serious injury.
Danger	**Danger** indicates a hazard with a high level of risk which, if not avoided, will result in death or serious injury.

Warning

1. The compatibility of the product is the responsibility of the person who designs the equipment or decides its specifications.
Since the product specified here is used under various operating conditions, its compatibility with specific equipment must be decided by the person who designs the equipment or decides its specifications based on necessary analysis and test results.
The expected performance and safety assurance of the equipment will be the responsibility of the person who has determined its compatibility with the product.
This person should also continuously review all specifications of the product referring to its latest catalog information, with a view to giving due consideration to any possibility of equipment failure when configuring the equipment.

2. Only personnel with appropriate training should operate machinery and equipment.
The product specified here may become unsafe if handled incorrectly.
The assembly, operation and maintenance of machines or equipment including our products must be performed by an operator who is appropriately trained and experienced.

3. Do not service or attempt to remove product and machinery/equipment until safety is confirmed.
The inspection and maintenance of machinery/equipment should only be performed after measures to prevent falling or runaway of the driven objects have been confirmed.
When the product is to be removed, confirm that the safety measures as mentioned above are implemented and the power from any appropriate source is cut, and read and understand the specific product precautions of all relevant products carefully.
Before machinery/equipment is restarted, take measures to prevent unexpected operation and malfunction.

4. Contact SMC beforehand and take special consideration of safety measures if the product is to be used in any of the following conditions.
1) Conditions and environments outside of the given specifications, or use outdoors or in a place exposed to direct sunlight.
2) Installation on equipment in conjunction with atomic energy, railways, air navigation, space, shipping, vehicles, military, medical treatment, combustion and recreation, or equipment in contact with food and beverages, emergency stop circuits, clutch and brake circuits in press applications, safety equipment or other applications unsuitable for the standard specifications described in the product catalog.
3) An application which could have negative effects on people, property, or animals requiring special safety analysis.
4) Use in an interlock circuit, which requires the provision of double interlock for possible failure by using a mechanical protective function, and periodical checks to confirm proper operation.

LECP6 Series / Controller
1. Safety Instructions

⚠Caution

The product is provided for use in manufacturing industries.
The product herein described is basically provided for peaceful use in manufacturing industries.
If considering using the product in other industries, consult SMC beforehand and exchange specifications or a contract if necessary.
If anything is unclear, contact your nearest sales branch.

Limited warranty and Disclaimer/Compliance Requirements

The product used is subject to the following “Limited warranty and Disclaimer” and “Compliance Requirements”.
Read and accept them before using the product.

Limited warranty and Disclaimer

The warranty period of the product is 1 year in service or 1.5 years after the product is delivered.*3) Also, the product may have specified durability, running distance or replacement parts. Please consult your nearest sales branch.

For any failure or damage reported within the warranty period which is clearly our responsibility, a replacement product or necessary parts will be provided.
This limited warranty applies only to our product independently, and not to any other damage incurred due to the failure of the product.

Prior to using SMC products, please read and understand the warranty terms and disclaimers noted in the specified catalog for the particular products.

***3) Vacuum pads are excluded from this 1 year warranty.**
A vacuum pad is a consumable part, so it is warranted for a year after it is delivered.
Also, even within the warranty period, the wear of a product due to the use of the vacuum pad or failure due to the deterioration of rubber material are not covered by the limited warranty.

Compliance Requirements

When the product is exported, strictly follow the laws required by the Ministry of Economy, Trade and Industry (Foreign Exchange and Foreign Trade Control Law).

2. Product Outline

2.1 Product features

The followings are the main functions of this controller:

- Actuator control

  A positioning operation and operation at a specific speed and force for the actuator are possible by controlling the servo motor.

- Specified force operation

  Control the pushing force or the pressing force of the actuator.

- Separated power supply

  The power supply is separated into the drive power and the control power. Therefore, even when the drive power is off, if the control power is on, the position information from the encoder will be maintained and the serial communication and parallel I/O control are still available.

- Return to origin

  Return the actuator to the home position by sending a single signal to a dedicated terminal.

- Alarm detection function

  Automatically detect the abnormal conditions and output the appropriate alarm signal via the serial interface and parallel I/O. The alarm information (up to the last 8 alarms) will be recorded into the memory in the controller.

- 64 step data

  Control the actuator according to the step data specified by the input of parallel I/O.

  It is possible to setup various parameters for each operation pattern.

- Area output

  The area output terminal will be activated if the actuator position is within the range specified by "Area 1" and "Area 2" in the step data.

- Data input method

  It is possible to perform a parameter setup, status monitoring, trial run and alarm reset via the serial communication with a PC installed with the controller setting software or the teaching box.

- Easy mode and Normal mode

  There are two available modes for the controller setting software and the teaching box. In the Easy mode, you can start the operation by only setting the speed, position, etc. On the other hand, in the Normal mode, you can make a further detailed setup.

⚠Caution
Please Keep this manual safe for future use. It will be necessary to refer to this manual along with the teaching box and the setting software manuals at installation and faultfinding.

2.2 How to Order

The part number construction for this product is as follows:

L E C P 6 N □ □ — □

Controller

Compatible motor

P	Step motor (Servo / 24VDC)

Number of step data

6	64 data

Parallel I/O type

N	NPN type
P	PNP type

I/O cable length

Nil	None
1	1.5m
3	3m
5	5m

Actuator part number

("LE" to "Stroke" of the actuator part number)
Example: If "LEHZ10LK2-4AF-R16N1D" is the complete actuator part number, "LEHZ10LK2-4" will come here.

DIN rail

Nil	Not mountable.
D	Mountable

⚠ Caution

The controller and actuator are factory set Confirm the combination of the controller and the actuator is correct.

<Check the following before use.>

(1) Check the actuator lable for model number.
This matches the controller.

(2) Check Parallel I/O configuration matches (NPN or PNP) .

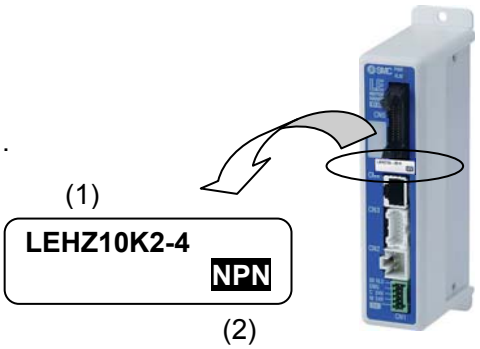

2.3 Product configuration

The product configuration of this controller is as follows.

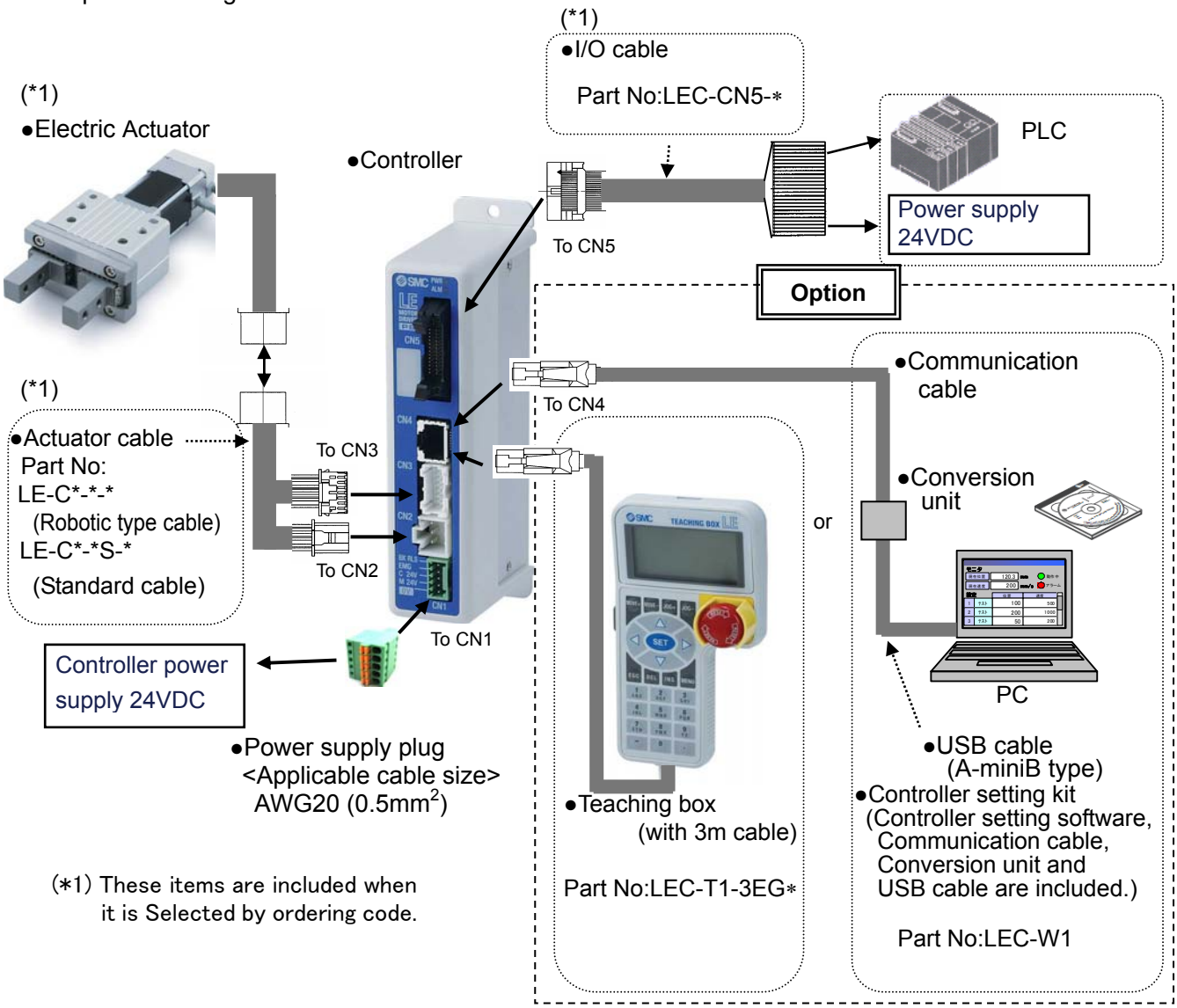

⚠ Warning

Check all the connections as shown in section 4 and diagrams shown on page 16. Pay special attention to details in section 13 on page 53.
Please Connect to the personal computer communication cable with the USB port cable via the conversion unit.

Do not connect the teaching box directly to the personal computer.
Do not use LAN cable to connect to the controller, it will cause damage to the personal computer .

2.4 Start up Procedures

Before using this controller, please connect cables and startup using the following procedures.

(1) Confirmation of the package content

When you open the product package for the first time; please check the package contents to confirm the controller, label indication, quantity of accessories, etc. are correct.

Item	Quantity
Controller (LECP6***-*)	1 unit
Power supply plug	1 piece
I/O cable(*) (LEC-CN5-*)	1 piece
Actuator(*)	1 unit
Actuator cable(*) (LE-CP-*-*)	1 piece

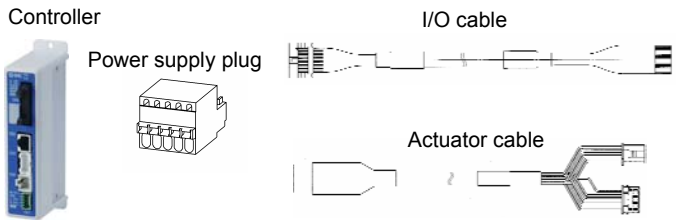

(*)These items are included if you ordered by the part number for a set of controller and actuator.

Option

Teaching box (part number: LEC-T1-3*G*)

Controller setting kit (part number: LEC-W1)
[Controller setting software, communication cable, USB cable and conversion unit are included.]

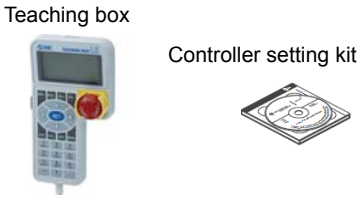

* In case of any shortages or damaged parts, please contact the selling office.

(2) Installation

Please refer to the **“3.4 How to install (page 14)”**

(3) Wiring and connection

Connect cables, etc. to the connector (CN1 to CN5) of the controller.

Please refer to the **“4 External Wiring Diagram (page 16)”** for the wiring of the connectors.

(4) Power ON alarm (error)

Ensure the stop is not activated and then supply 24VDC power.

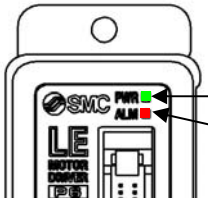

Controller

LED color	Status	Function
Green	Normal	POWER
Red	Error	ALARM

If the LED [PWR] lights in green, the controller is in the normal condition.

However, if the LED [ALM] lights in red, the controller is in the alarm (error) condition.

⚠Caution

In case of alarm (error) condition:

Connect a PC or the teaching box to the CN4 serial I/O connector and check the details of the alarm. Then, remove the cause of the error referring to the **"12. Alarm Detection (page 48)."**

* Please refer to the manuals of the controller setting software or the teaching box for details of the alarms.

(5) Operation pattern setting

Setup the operation pattern (step data, basic parameter and return to origin parameters) to specify the target position, speed, etc. by using a PC (with the controller setting software) or the teaching box.

■ PC (Normal mode)

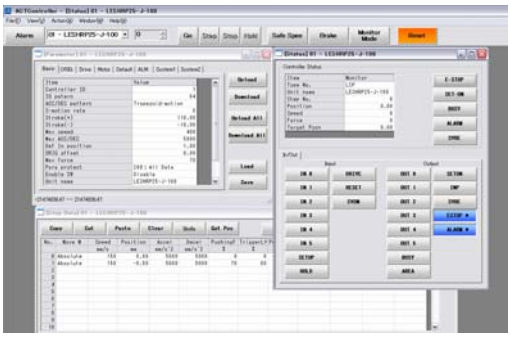

■ Teaching box

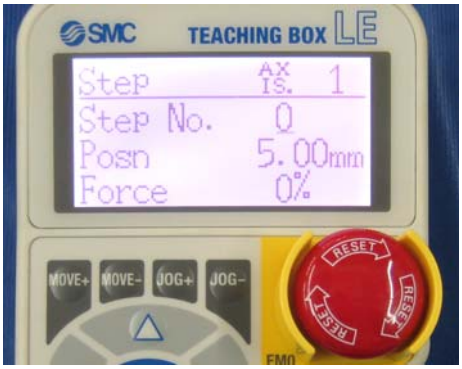

Please refer to the manuals of the controller setting software or the teaching box for how to setup the operation pattern.

(6) Trial run (actuator adjustment)

Please refer to the manuals of the controller setting software or the teaching box manual for how to perform a trial run.

3. Product Specifications

3.1 Basic specifications

The basic specifications of this controller are as follows:

Item	Specifications
Compatible motor	Step Motor (Servo / 24VDC)
Power supply (*1)	Power voltage:24VDC +/-10% Max.current consumption: 3A(Peak 5A) (*2) (for both of motor drive power,control power, stop,lock brake release)
Parallel input	11 inputs (photo-coupler isolation)
Parallel output	13 outputs (photo-coupler isolation)
Compatible encoder	Incremental A/B phase(800 pluse/rotation)
Serial communication	Conforming to RS485.
Memory	EEPROM
LED indicator	2 off LED's (green and red)
Lock control	Forced-lock release terminal
Cable length	I/O cable: 5m or less Actuator cable: 20m or less
Cooling system	Natural air cooling
Operating temperature range	0– 40°C(No freezing)
Operating humidity range	90%RH or less (No condensation)
Storage temperature range	-10 – 60°C (No freezing)
Storage humidity range	90%RH or less (No condensation)
Insulation resistance	Between the housing (radiation fin) and FG terminal 50MΩ (500VDC)
Mass	150g(screw mount type) 170g(DIN rail mount type)

(*1) The controller power supply do not use the power supply of "rush-current restraining type".

(*2) The power consumption changes depending on the actuator model. Please refer to the specifications of actuator for more details.

3.2 Parts description

The detailed descriptions of each part are as follows:

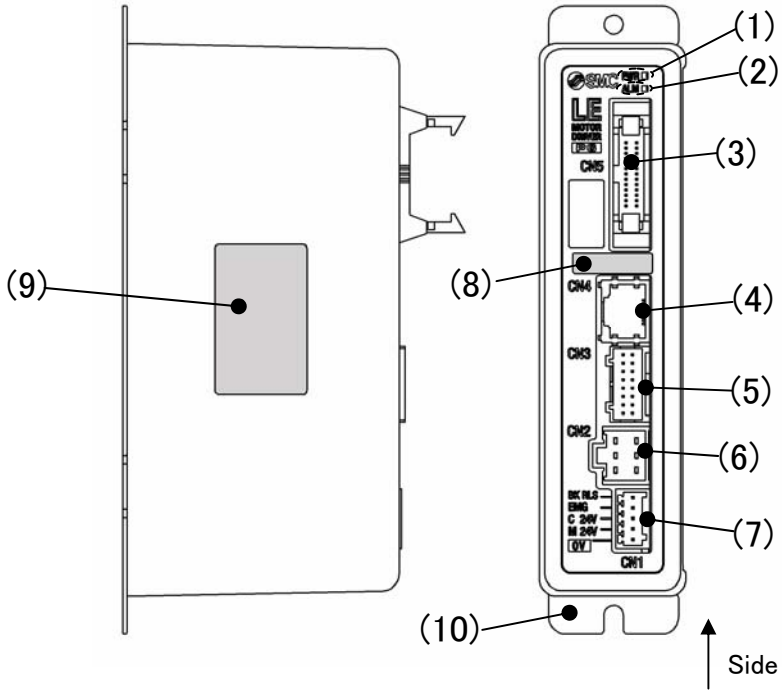

Side (controller version)

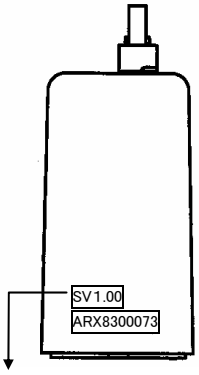

Label of controller version
(Example) controller version "SV1.00"

No.	Label	Name	Description
1	PWR	Power LED (green)	Power ON/No alarm: Green light Data (step data, parameter) writing /green light flashing ⚠caution Do not turn off the controller input power or remove the cable while data is being written (green light flashing). *Data (step data ,parameter) may not be written correctly.
2	ALM	Power LED (red)	Power ON/Alarm: Red light
3	CN5	Parallel I/O Connector (26 pins)	Used to connect PLC, etc. with the I/O cable. (11 inputs and COM, 13 outputs and COM)
4	CN4	Serial I/O Connector (8 pins)	Used to connect the teaching box, PC, etc.
5	CN3	Encoder connector (16 pins)	Used to connect the actuator cable.
6	CN2	Motor power connector (6 pins)	
7	CN1	Power connector (5 pins)	Used to connect the controller power supply (24VDC) with the power supply plug. Common power(-),Motor power (+),Control power(+),Stop signal(+),Lock release(+)
8	-	Compatible actuator label	The label indicating the applicable actuator model. It also indicates the type of the parallel I/O (PNP/NPN).
9	-	Controller label	The label indicating the part number of the controller.
10	-	FG	Functional ground

3.3 Outside dimension diagram

The outside view of this product is as shown in the diagram below:

(1) Screw mount type (LECP6-*)**

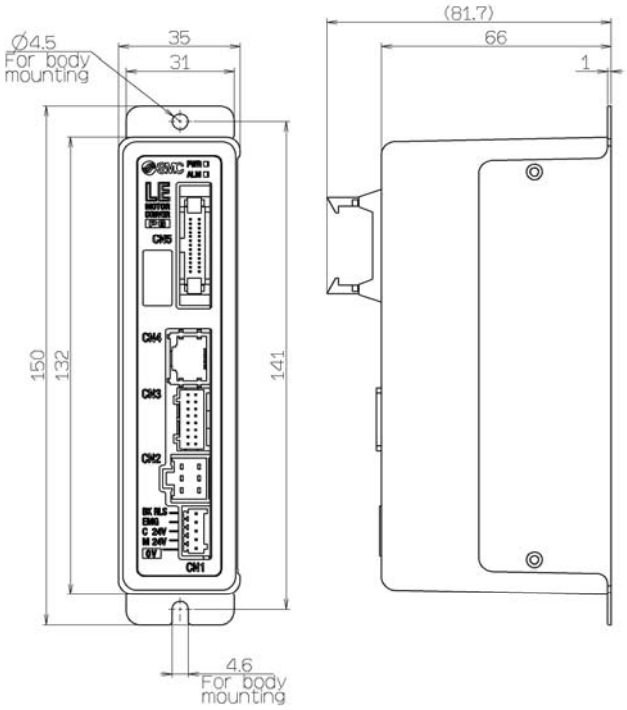

(2) DIN rail mount type (LECP6D-*)**

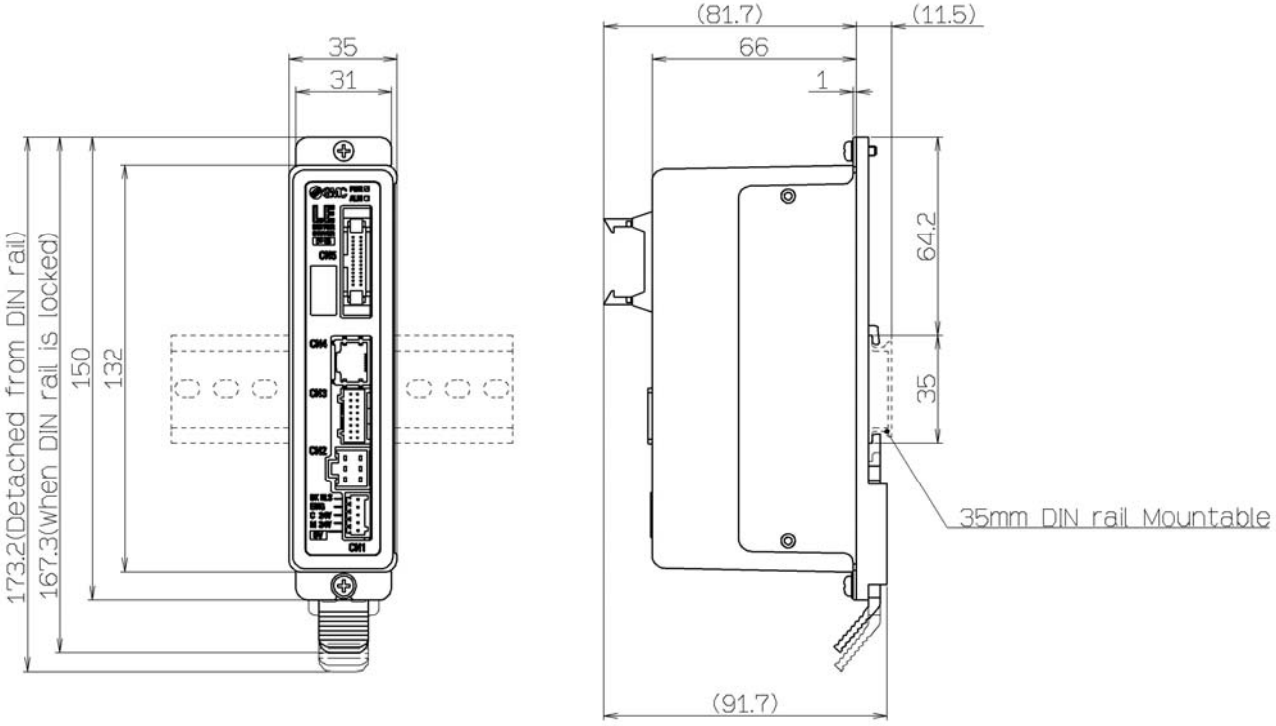

3.4 How to install

(1) How to install

There are two types of controllers; screw mount type and DIN rail mount type.

The followings are the descriptions on how to install each type:

[1] Screw mount type (LECP6-*)**

(Installation with two M4 screws)

[2] DIN rail mount type (LECP6D-*)**

(Installation with the DIN rail)

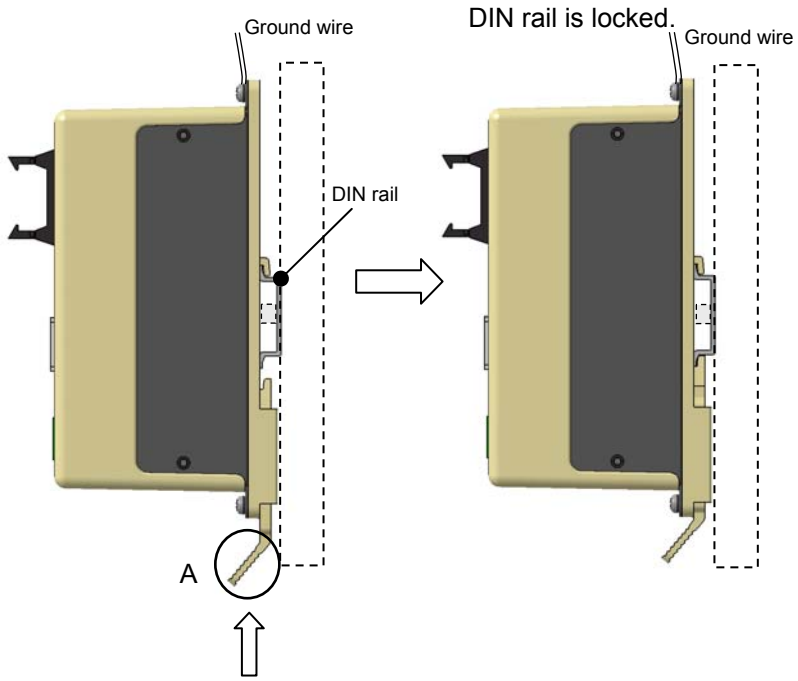

Hook the controller on the DIN rail and press the lever of section A in the arrow direction to lock it.

(2) Ground wire connection

As shown in the diagram below, tighten the ground wire with a screw.

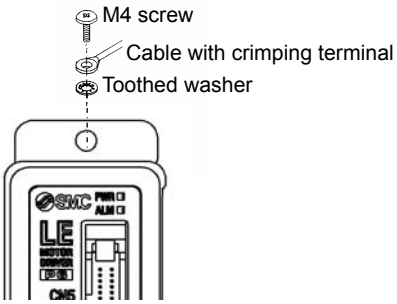

Controller

⚠Caution

The M4 screw, cable with crimping terminal, and toothed washer should be obtained separately.

Ground the controller to shield it from electric noise.

⚠Caution

(1) The earthling should be the dedicated grounding point. It should be a functional ground with less than 100 Ω resistance.

(2) The cross section of the grounding wire should be greater than 2mm^2.
The ground point should be near this controller to make the wire length shorter.

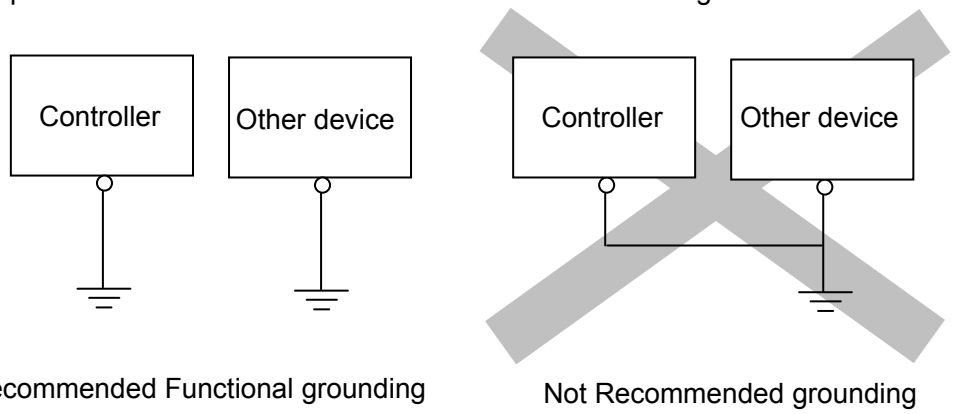

(3) Installation location

Please install this controller at an appropriate place where the surrounding temperature will not exceed 40°C.

As shown in the diagrams below, the controller should be installed on a vertical wall with 30 / 50mm or larger spaces above and below it. In addition, there should be 60mm or larger space between the controller and the facing cover (the housing) so that it is possible to connect/disconnect the controller. The controllers should be positioned appropriately with enough spaces to keep it within the above mentioned operating temperature range.

Place supplys of vibration like a large-size electromagnetic contactor, no-fuse current chopper, etc. to be mounted on a different panel or away from the controller.

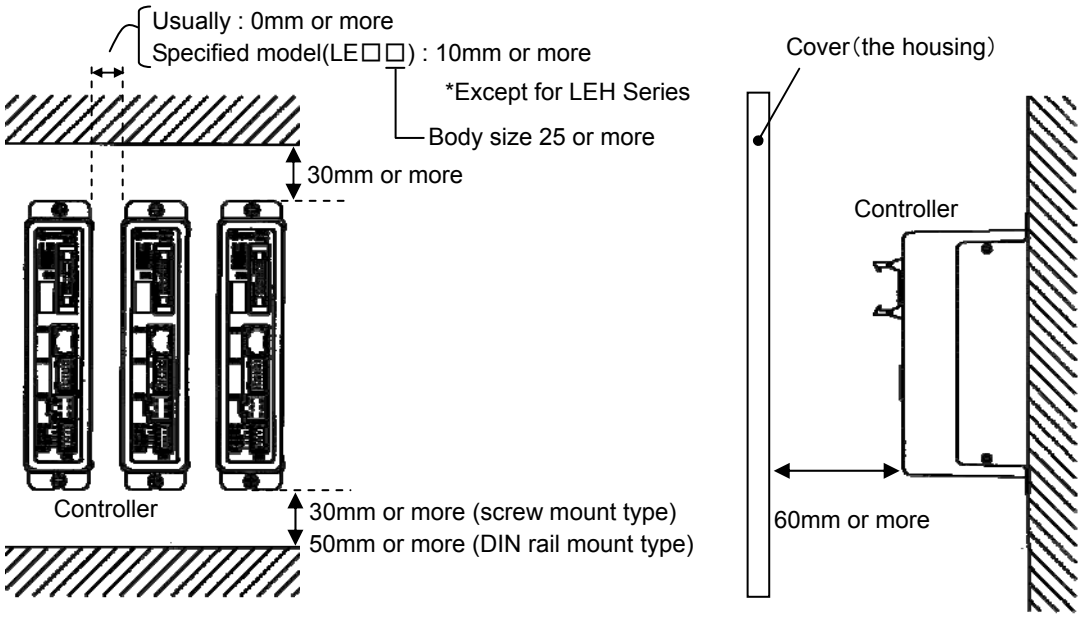

⚠Caution

Install the controller on a flat surface. Excessive pressure applied to the housing will damage the controller.

4. External Wiring Diagram

The typical connections for each connector of this controller (CN1 to CN5) are as shown below.

4.1 CN1: Power connector

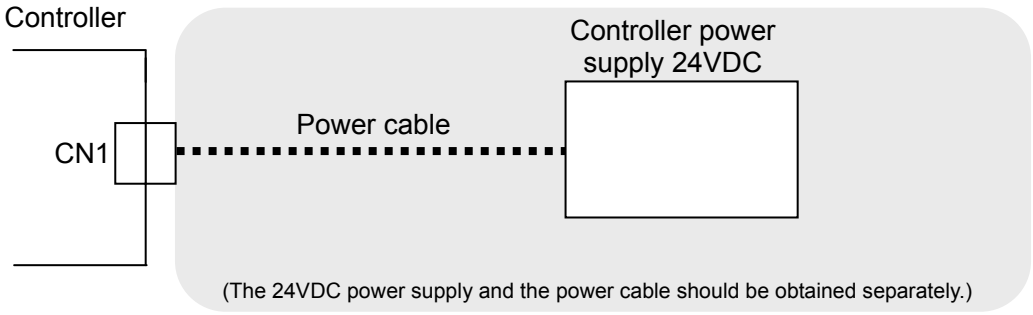

* Please refer to **"5. CN1: Power supply plug (page 18)"** for how to wire the CN1 connector.

⚠Caution
The controller power supply (24VDC) do not use the power supply of "rush-current restraining type".

4.2 CN2: Motor power connector and CN3: Encoder connector

Connect the controller and the actuator with the actuator cable (LE-CP-*-*).

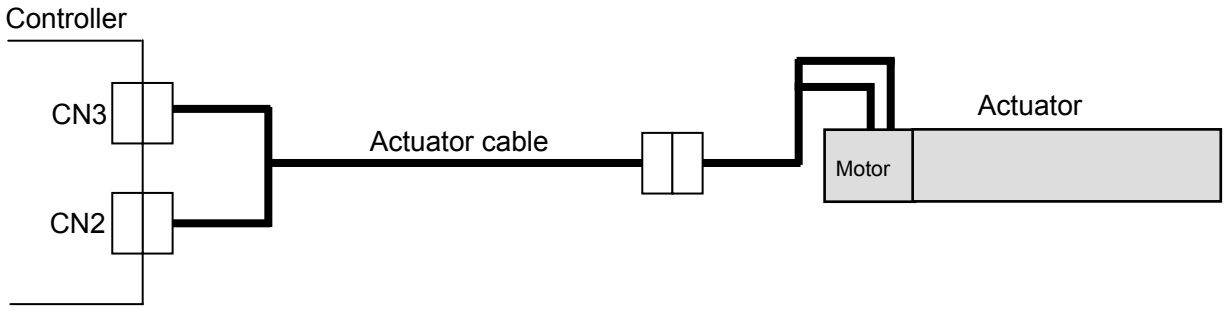

4.3 CN4: Serial I/O connector

(1) Connection with the teaching box

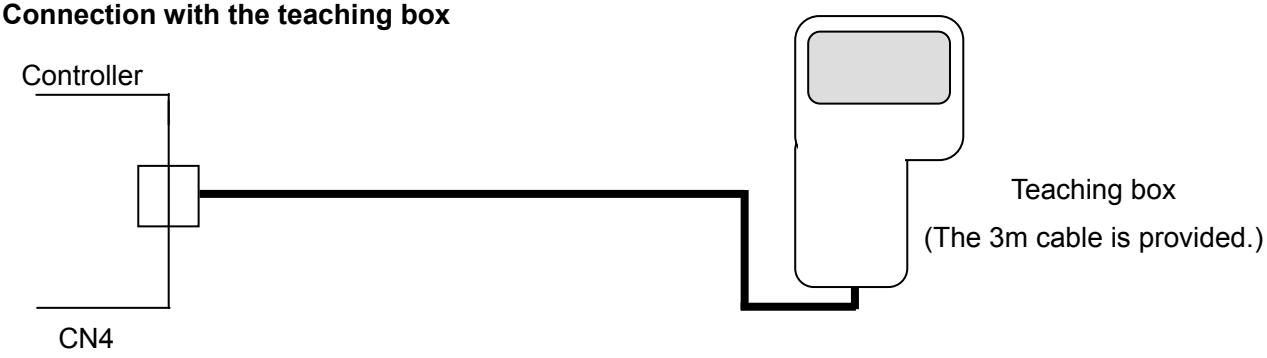

(2) Connection with a PC

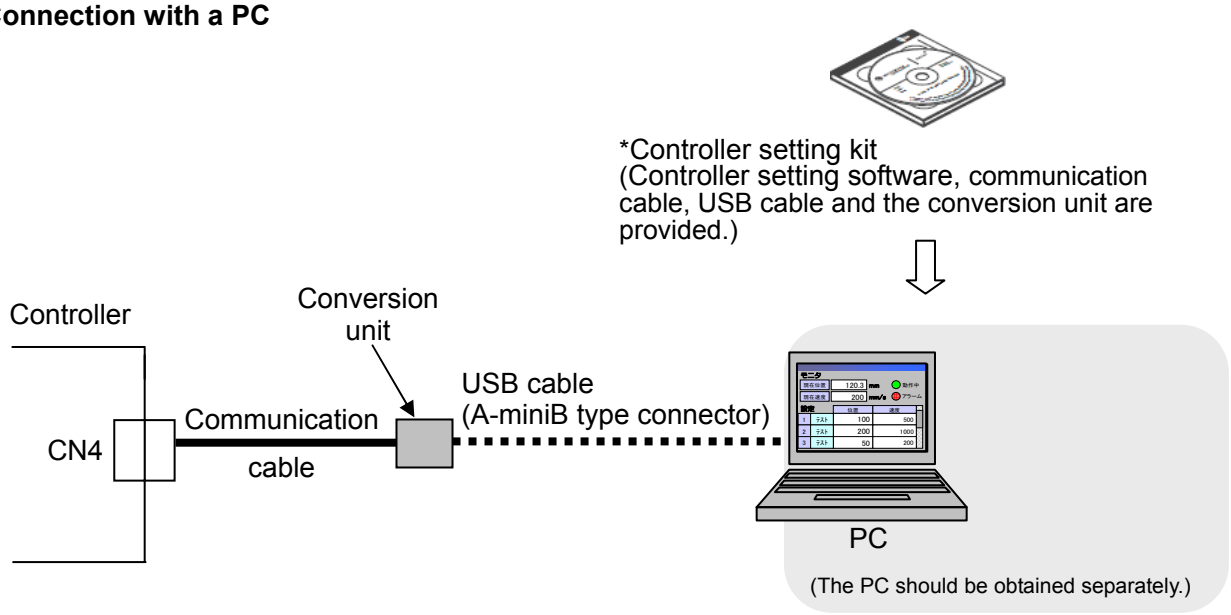

4.4 CN5: Parallel I/O connector

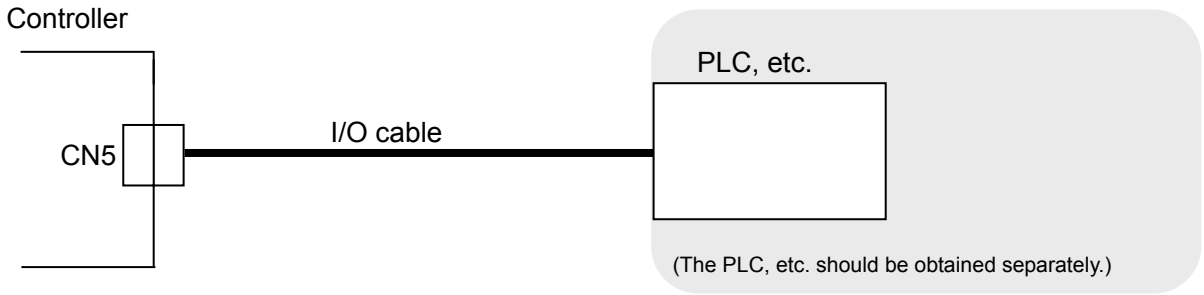

* Please refer to **“6.4 Parallel I/O Wiring Example (page 27)”** for how to wire the CN5 connector.

* Please refer to **"6.3 The parallel I/O signal is detailed. (page 24)"** for details of each signal of parallel I/O.

5. CN1: Power supply plug

5.1 Power supply plug specifications

The specifications of the provided power supply plug are as follows.

Power supply plug

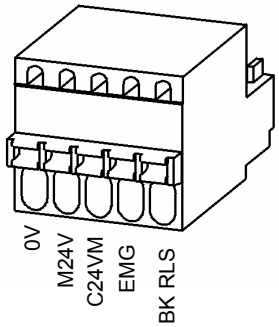

Terminal	Function	Descriptions
0V	Common power (-)	The negative common power for M24V, C24V, EMG and BK RLS.
M24V	Motor power (+)	The positive power for the actuator motor to be supplied via the controller.
C24V	Control power (+)	The positive control power.
EMG	Stop signal(+)	The positive power for Stop signal.
BK RLS	Lock release (+)	The positive power for lock release.

5.2 Electric wire specifications

Prepare electric wire according to the following specification:

Item	Specifications
Applicable wire size	AWG20 (0.5mm^2): Single line, No insulation sleeve, Twisted wire with bar terminal * The rated temperature for the insulation coating: 60°C or more.
Stripped section length	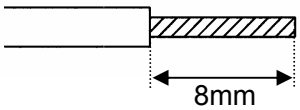

⚠Caution

Multiple electric wires should not be connected to one terminal.

After the wiring of the power supply plug is completed, connect it to the CN1 connector of the controller.

Please refer to **"5.3 Wiring of power supply plug (page19)"** for how to wire the power supply plug.

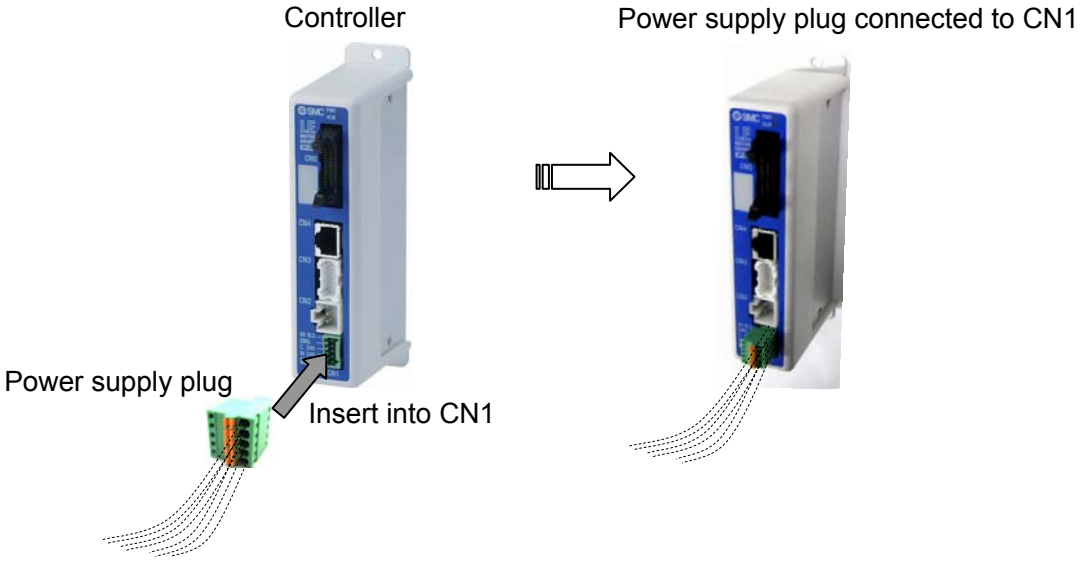

5.3 Wiring of power supply plug

Connect the power supply plug to the 24VDC controller power supply according to instructions (1) (2) and (3) and then, insert it into the CN1 connector of the controller.

(1) Wiring of the power supply

Connect the positive of the 24VDC controller power supply to the C24V and M24V. And connect the negative of that power supply to the 0V terminal.

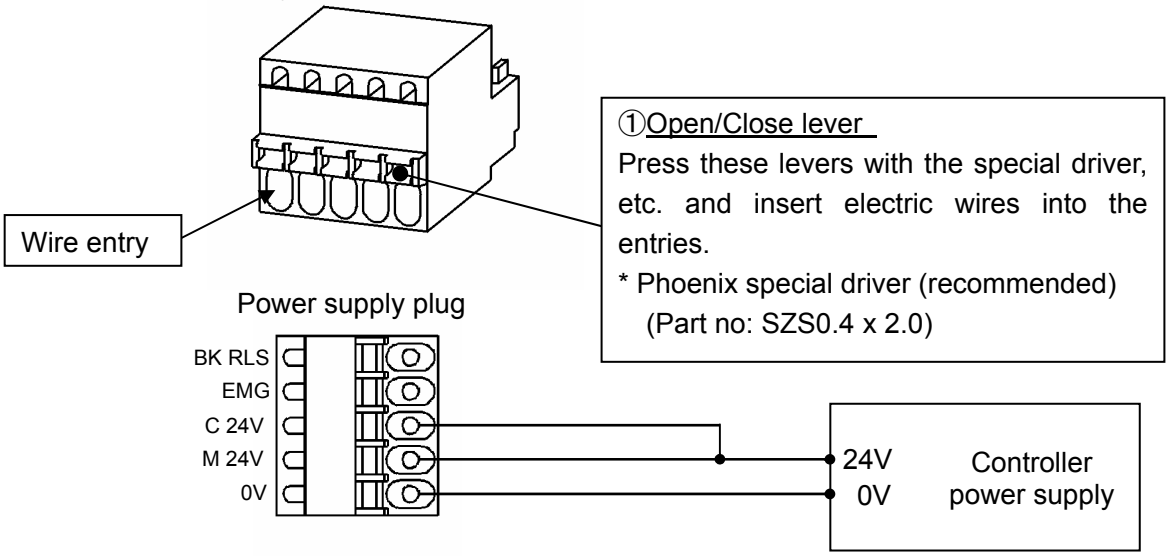

⚠Caution

For controller input power supply (24VDC) use a power supply with a capadty not less than the "momentary maximum power" of the actuator spedfications. Do not use "inrush-current restraining type"power supply.

(2) Wiring of the stop switch

Stop switch must be installed by the user to stop the actuator in abnormal situations.

Please refer to **"5.4 Stop circuits (page20)"** for examples of how to wire stop switches.

(3) Wiring of the lock release

Actuators with lock will need a lock release switch fitted.

* The switch (24VDC, Contact capacity: 0.5A or more) should be obtained separately.

One terminal of the lock release switch should be connected to the 24VDC power supply and the other should be connected to the BK RLS terminal. When this is switched on, the lock will be released forcibly.

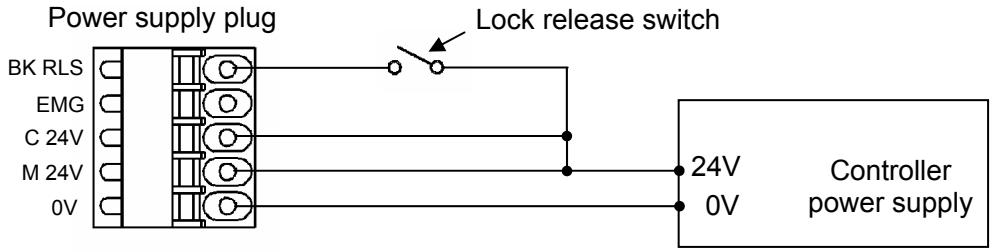

⚠Caution

1. If the actuator is a non lock type, it is not necessary to wire the BK RLS terminal.
2. The terminal BK RLS must not energize while using only for the adjustment and the return treatment in the emergency and usually operating.

5.4 Stop circuits

- The controller can provide a 'controlled stop'when the +24 VDC is removed from the 'EMG' pin. In a controlled stop condition the controller decelerates the actuator with maximum deceleration value for the actuator
- The stop switch on the teaching box causes a controlled stop if activated.
- For an Emergency stop the 24 VDC power supply should be disconnected from the motor (M24V).

(1) Example circuit 1- Single controller with teaching Box

When the teaching box is connected to the controller, the teaching box's stop switch will become effective.

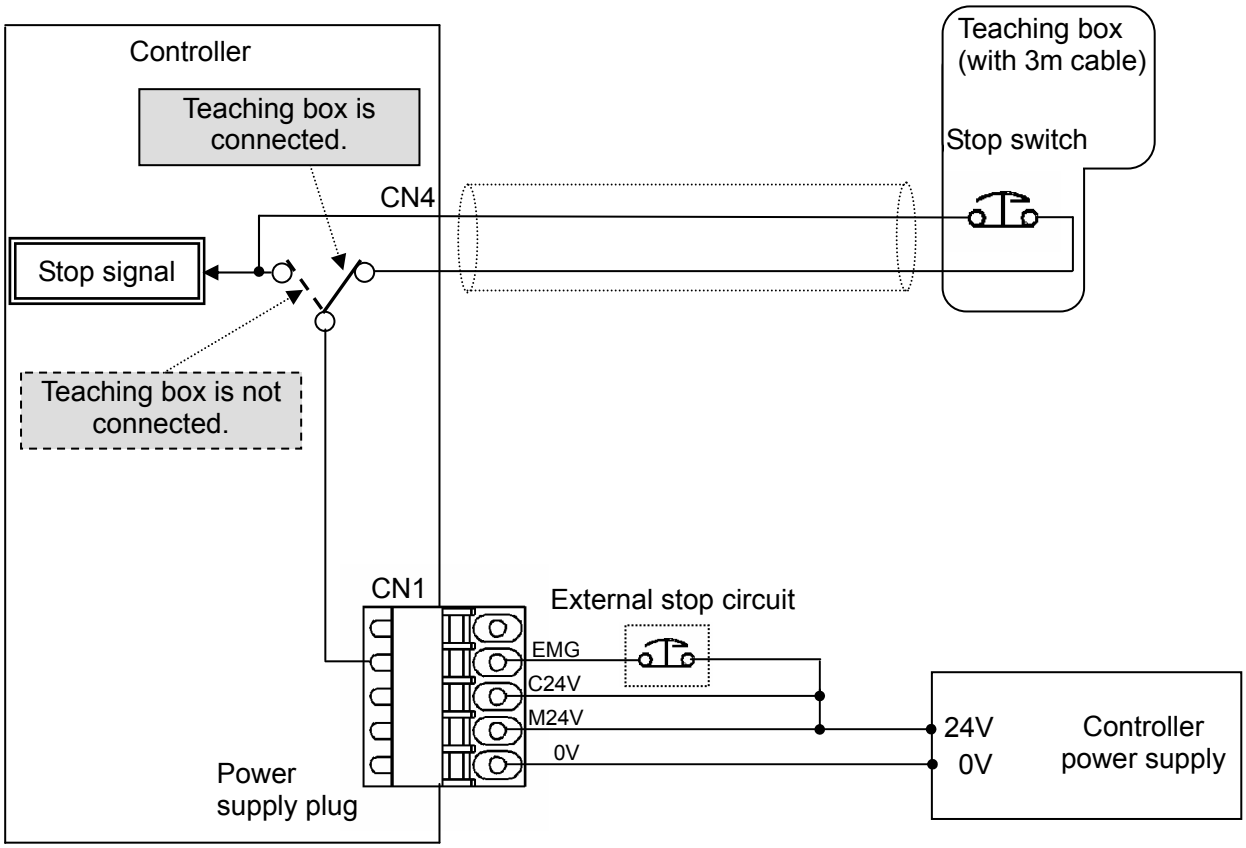

⚠Warning

The teaching box's stop switch is effective only to the controller that is connected with it.

The actuator slows down at the maximum. deceleration-and stops Then, it turns the servomotor off.

(2) Example circuit 2 - multiple controllers (Stop relay contact (1))

If the system where this controller is installed has a stop circuit for whole system, or if the system has multiple controllers with individual power supply, relay contacts should be made between the 24VDC controller power supply and the EMG terminal of the power supply plug.

(Circuit example)

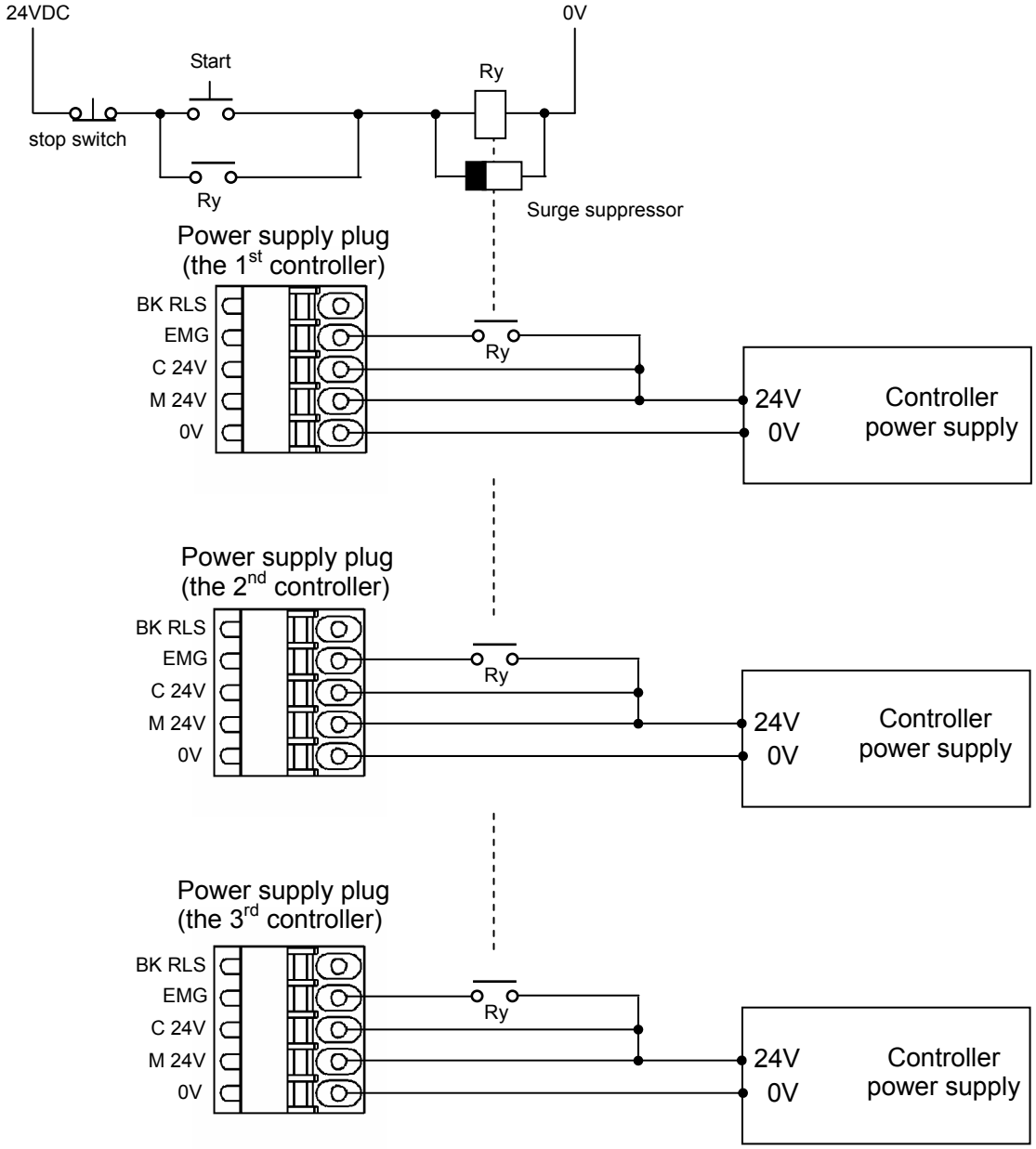

The relay must be a safety relay or monitored by a safety relay.

⚠Caution
When shutdown is input, the controller stops with maximum deceleration speed, then the motor is turned off.

(3) Example circuit 3 - Motor power shutdown (relay contact (2))

If there is a necessity to have circuit to shutdown the motor power externally, relay contacts should be made between the 24VDC controller power supply and the M24V and EMG terminal of the power supply plug.

Circuit example

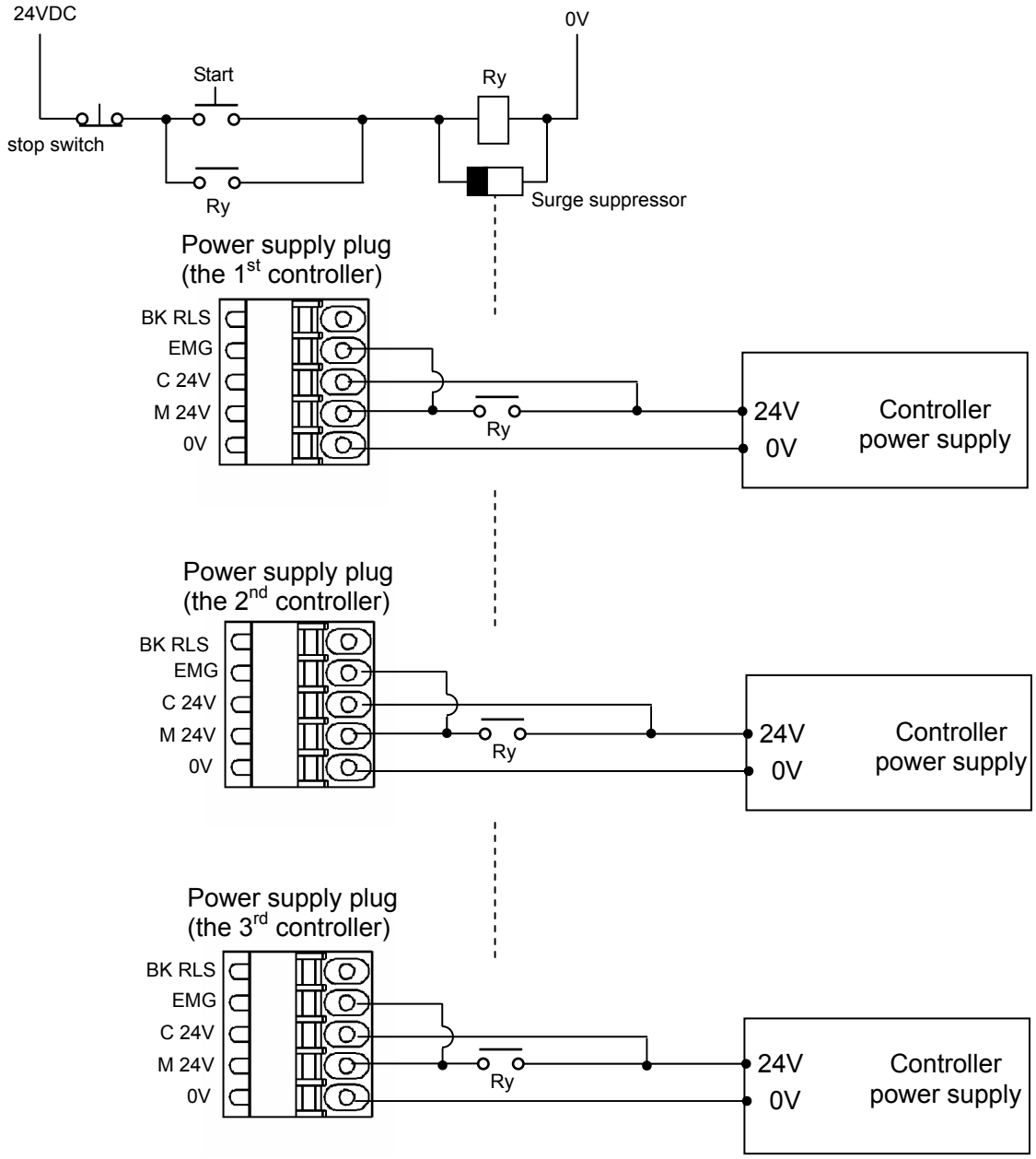

The relay must be a safety relay or monitored by a safety relay.

⚠Warning
1.Relay contacts should be made between the 24VDC controller power supply and the M24V and EMG terminal of the power supply plug. The actuator may make unexpected movement. 2.Do not perform return to origin (SETUP input ON) when motor drive power (M24V) is disconnected. The controller cannot recognize the correct origin point if a return to origin instruction is made with the motor drive power (M24V) disconnected. 3.The terminal BK RLS must not energize when you disconnected motor drive power (M24V).

6. CN5: Parallel I/O Connector

6.1 Parallel I/O specifications

*** Input specifications**

No.	Item	Specification
1	Input circuit	Internal circuit and photo coupler isolation
2	Number of inputs	11 inputs
3	Voltage	24VDC +/- 10%
4	Input current when ON	3.5mA±20% (at 24VDC)
5	Input Low Voltage Threshold	11V @ 1.5 mA

*** Output specifications**

No.	Item	Specification
1	Output circuit	Internal circuit and photo coupler Isolation
2	Number of outputs	13 outputs
3	Max. voltage between terminal	30VDC
4	Max. output current	10mA supply/sink
5	Saturation voltage	2.0V (Max.)

6.2 Parallel I/O type (NPN/PNP type)

There are two types of parallel I/O for this controller: NPN type (LECP6N**-*) and PNP type (LECP6P**-*).

(1) Parallel I/O input circuit (same for both NPN and PNP type)

NPN type

(a)	「COM+」〈A1〉
(b)	IN0〈A3〉-SVON〈A13〉

PNP type

(a)	「COM-」〈A2〉
(b)	IN0〈A3〉-SVON〈A13〉

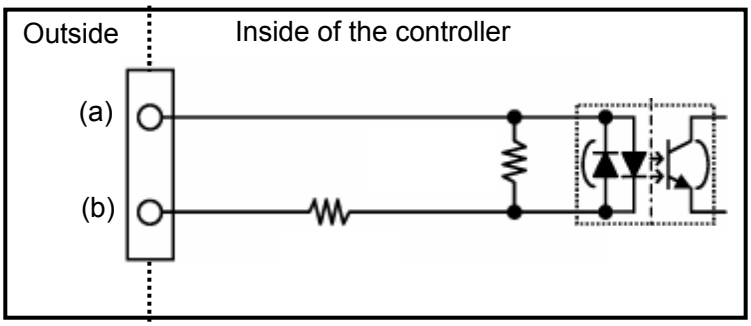

(2) Parallel I/O output circuit

NPN type

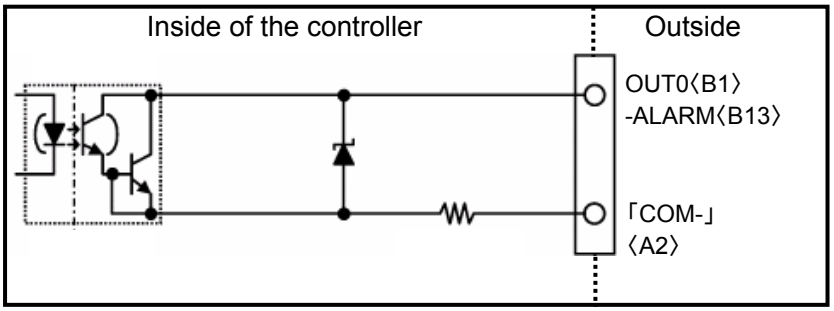

PNP type

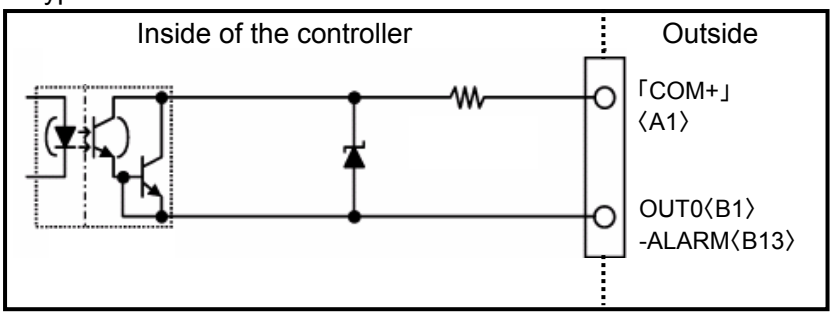

6.3 The parallel I/O signal is detailed.

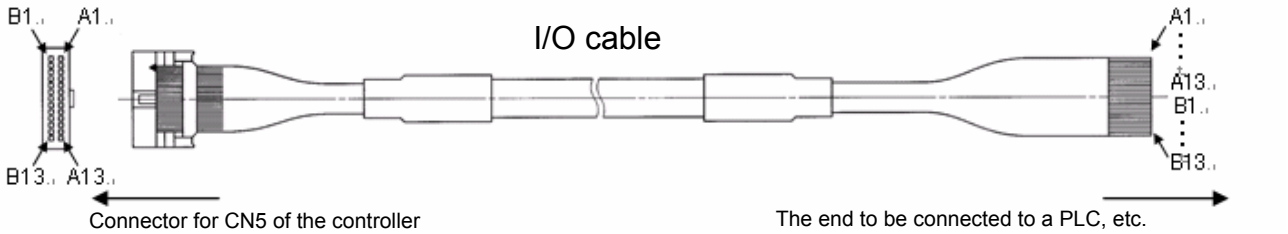

- Input terminal-

No.	Function	Description
A1	COM+	The terminal for the 24V of the 24VDC I/O signal power.
A2	COM-	The terminal for the 0V of the 24VDC I/O signal power.
A3	IN0	Bit no. to specify the step data (Specify the number by combining On/Off of the terminals.) Example: (Bit no. to specify the step data no.3.) IN5 IN4 IN3 IN2 IN1 IN0 OFF OFF OFF OFF ON ON 0 0 0 0 1 1 ← Binary code
A4	IN1	
A5	IN2	
A6	IN3	
A7	IN4	
A8	IN5	
A9	SETUP	When SVRE (B11) is ON, the SETUP operation (return to origin operation) will be performed. During the SETUP operation, BUSY (B7) will be turned ON and after completion of the SETUP operation, SETON (B9) and INP (B10) will be turned ON.
A10	HOLD	If HOLD input is ON during operation, the speed decreases at maximum deceleration speed of the basic parameter until the actuator stops. The remaining stroke will be on hold as long as HOLD is ON and when HOLD is turned OFF, the actuator restart to travel the remaining stroke. * When DRIVE or SETUP is ON: DRIVE or SETUP ON OFF On hold HOLD ON OFF Restart Speed **⚠ Caution** 1. As long as HOLD is ON, the DRIVE input will be disabled. 2. The output signals are rendered invalid whilst hold is in operation.
A11	DRIVE	When DRIVE is turned ON, the system scans the input IN0 to IN5 and starts the operation of the actuator. Then, when this terminal is turned OFF, the number of the active step data will be output via the terminals OUT0 to OUT5.
A12	RESET	The terminal to reset the alarm and the operation. After RESET, the speed decreases at maximum deceleration speed of the basic parameter until the actuator stops. INP and OUT0 to OUT5 will be turned OFF (however, if the actuator is stopped within the in-position range, the INP will be turned ON).
A13	SVON	When SVON is ON, the servo motor will be turned ON. When this is OFF, the servo motor will be turned OFF.

Effective condition of the Parallel I/O signal

Signal name \ Condition	SETON	SVRE	BUSY
SETUP (Return to origin)	-	ON	OFF(*1)
DRIVE (Operation start instruction)	ON	ON	-

("-" = It doesn't depend In the ON/OFF state of the each output signal)

*1 During the positioning operation the SETUP input will be disabled whilst hold is in operation.

⚠Caution

SETUP and DRIVE can only be accepted during the above conditions. An Alarm condition will happen during all other times. Keep the input signal combination for 15 ms (30 ms if possible) or longer.

-Output terminal-

No.	Function	Description
B1	OUT0	When the operation is started and DRIVE is turned OFF, a Bit no. corresponding to the number of the active step data will be output from these terminals. This output signal will be updated when DRIVE (A11) terminal is be turned ON. **⚠Caution** 1 When RESET is turned ON, these terminals are turned OFF. 2 During the alarm, these terminals output the alarm group. 3 During the pushing operation, if the actuator runs over the defined pushing width, these terminals will be turned OFF.
B2	OUT1	
B3	OUT2	
B4	OUT3	
B5	OUT4	
B6	OUT5	
B7	BUSY	This terminal is ON during the movement of the actuator (during the positioning operation, etc.). **⚠Caution** During the pushing operation without movement (no movement but the actuator generating the pushing force), BUSY is OFF. BUSY signal stays on for 50ms or longer after operation starts.
B8	AREA	When the actuator is within the range between Area 2 and Area1 in the step data, this terminal will be turned ON. The range changes depending on the active step data.
B9	SETON	When the actuator is in the SETON status (the position information is established), this terminal is turned ON. When the position status is not established, this terminal is OFF.
B10	INP	Because of actuator action, if output INP is ON, the actuator condition can vary. At the origin when within the ±"default Inposition" in the Basic parameter. During positioning operation Turns ON when the current position is within "Step data position +/- positioning range". During pushing operation When the pushing force exceeds the value set in the step data "Trigger LV".

B10	INP continue	**⚠Caution** (1)Pushing operation is finished ,it is automated change to energy saving mode INP output singal is setted to ON. And pushing operation stopped seat is change to running state general power running is repeatedly (Example) Step data“force”is 100% Step data“Trigger LV”is 80%, The energy saving setting of the actuator is 40%(*1) 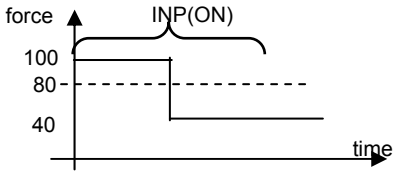 (2) If controller version is below SV1.00 . During pushing operation in energy saving mode, if the energy saving setting is less than the Trigger LV value, the INP output signal will turn OFF. When movement starts again from the pushing stopped state, it will do pushing operation with energy saving pushing force. (Example) Step data “force” is 100% Step data “Trigger LV” is 80% The energy saving setting of the actuator is 40%.(* 1) 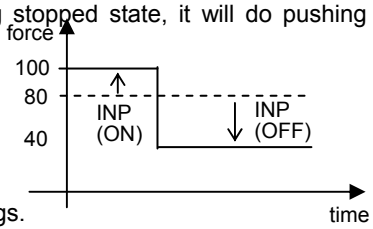 (*1)The actuator model determines the energy settings. Please refer to the specifications of actuator for more details. If the stop is input from the EMG or RESET terminal or the stop-switch on the connected Teaching Box during pushing operation,the actuator stop. (“Busy”signal turns OFF) And if the actuator stop within the range of ”Position”± ”In pos” defined in step data,output signal “INP” turns ON.
B11	SVRE	When the servo motor is OFF,SVRE is OFF. When the servo motor is ON,SVRE is ON.
B12	*ESTOP	During activation of Teaching Box stop switch, this terminal is OFF. During the normal operation, this is ON. This is synchronized to the input terminal for the EMG signal on the controller connector CN1
B13	*ALARM	When there are no alarms, this terminal is ON. When there are alarms, this is OFF.

The table below shows the changes in the output signal with respect to controllers state.

State / Output signal	BUSY	INP	SVRE	Lock	SETON	OUT0-5
Controller powered down [SVOFF] with no motion	OFF	OFF	OFF	Lock	OFF	OFF
Controller powered down [SVON] with no motion	OFF	OFF	ON	Release	OFF	OFF
During returning to origin, [SETUP].	ON	OFF	ON	Release	OFF	OFF
The actuator is at the origin. On completion of [SETUP]	OFF	ON(* 1)	ON	Release	ON	OFF
During movement by positioning/pushing operation.	ON	OFF	ON	Release	ON	ON(* 2)
The actuator is paused by [HOLD]	OFF	OFF	ON	Release	ON	ON(* 2)
On completion of the positioning operation.	OFF	ON(* 4)	ON	Release	ON	ON(* 2)
Stopped due to pushing a work-load in pushing operation.	OFF	ON	ON	Release	ON	ON(* 2)
Stopped due to no detection of work-load during a pushing operation.	OFF	OFF	ON	Release	ON	OFF
On completion of return to origin and then with [SVON] turned off.	OFF	OFF(* 4)	OFF	Lock	ON	ON(* 3)
EMG signal stop from the CN1 connector after the actuator is at the origin.	OFF	OFF(* 4)	OFF	Lock	ON	OFF

* 1:The output turns on when the actuator is within the range defined in the basic parameter setup.
* 2:The output is updated on the transision of (ON→OFF) of the DRIVE input signal.
* 3:Retains the previous state.
* 4:The output turns on when the actuator is "In position" of the step data.

6.4 Parallel I/O Wiring Example

When you connect a PLC, etc. to the CN5 parallel I/O connector, please use the I/O cable (LEC-CN5-*).

The wiring should be changed depending on the type of the parallel I/O (NPN or PNP).

Please wire referring to the following diagram

*** NPN type**

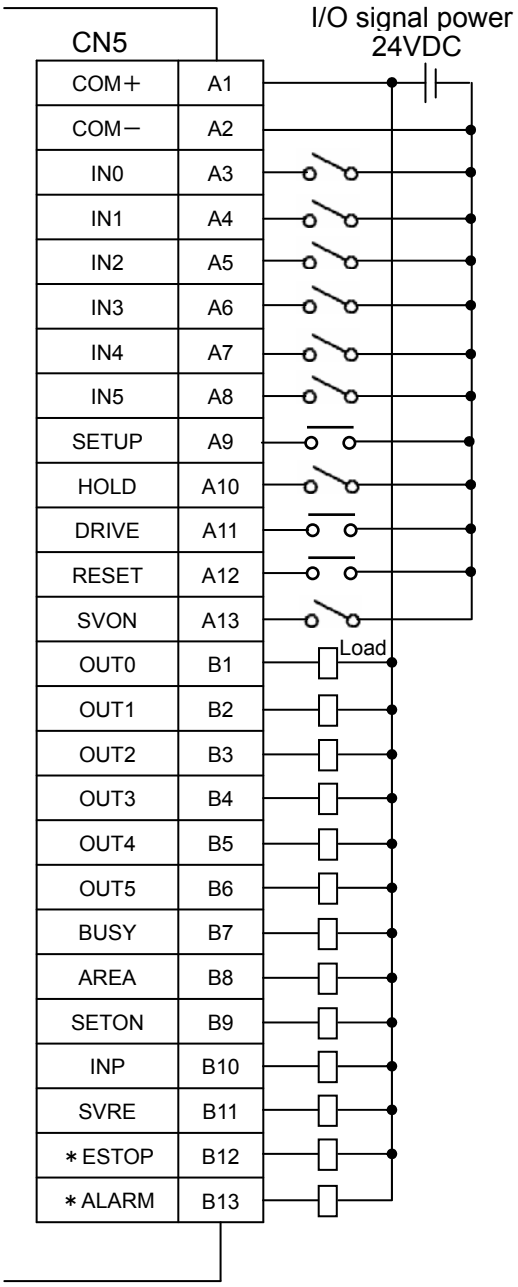

*** PNP type**

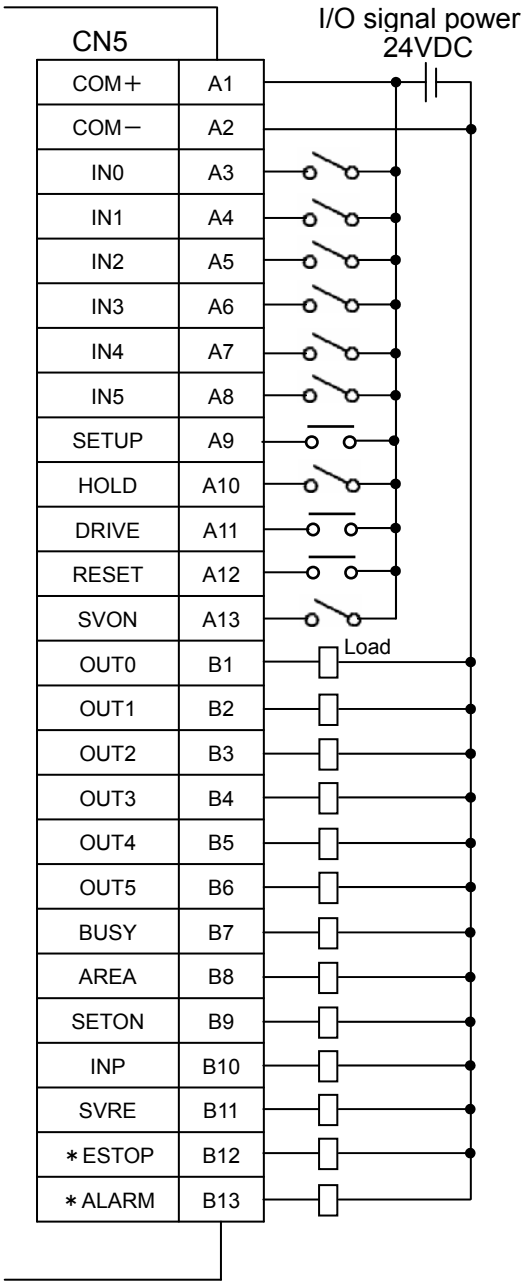

⚠ Caution

The 24VDC controller power supply for CN1 and the 24VDC I/O power supply for CN5 should be separated.

7. Setting Data Entry

In order to move the actuator to a specific position, it is necessary to setup the patterns of operations with a PC (with the controller setting software) or the teaching box. This setup data input by the software or teaching box will be recorded in the memory of the controller.

For the controller setting software and the teaching box, there are two available modes (the Easy mode and the Normal mode). You can select the appropriate one depending on the operation.

* Easy mode

In Easy mode, you can start up the actuator by entering only a limited number of settings with the controller setting software and the teaching box.

* The combination of settings you need to setup will change depending on the type of actuators (combination of data can be selected.)

* Normal mode

In Normal mode, you can make a further detailed setup (conditions for actuator and controller, etc.) than the Easy mode.

You can change three kinds of setting data, “Step data,” “Basic parameter” and “Return to origin parameter” in this mode.

7.1 Step data

A “step data” is the setting data mainly describing the movement of the actuator. Total 64 step data (12 types) can be handled with this controller. Each step data will become effective as soon as it is recorded into the controller.

(Example) Step data on the PC (controller setting software) screen [Normal mode]

No.	Move	Speed mm/s	Position mm	Accel mm/s^2	Decel mm/s^2	PushingF %	TriggerLV %	PushingSp mm/s	Moving F %	Area1 mm	Area2 mm	In pos mm
0	Absolute	100	20.00	1000	1000	0	0	0	100	18.00	22.50	0.5
1	Absolute	50	10.00	1000	1000	70	60	5	100	6.0	12.0	1.5
63	Absolute	20	5.00	500	500	0	0	0	100	3.0	8.0	1.2

Details of step data

<table>
<tr><th>Setting name</th><th>Range</th><th>Description</th></tr>
<tr><td>No.</td><td>0 to 63</td><td>Number of the step data.</td></tr>
<tr><td>MovementMOD</td><td>3 options
(See the right descriptions.)</td><td>The setting to specify the coordinate system for the target position.
<table>
<tr><th>Software</th><th>TB</th><th>Description</th></tr>
<tr><td>Blank</td><td>Disable</td><td>The step data is ineffective.</td></tr>
<tr><td>Absolute</td><td>Absolute</td><td>The target position will be defined by the absolute coordination based on the zero point.</td></tr>
<tr><td>Relative</td><td>Relative</td><td>The target position will be defined by the relative coordination based on the current position.</td></tr>
</table></td></tr>
<tr><td>Speed</td><td>1 to “Max speed” of the basic parameter</td><td>The speed to move to the target position (Unit: mm/s)</td></tr>
<tr><td>Position</td><td>“Stroke (-)” to “Stroke (+)” of the basic parameter</td><td>The target position (Unit: mm)</td></tr>
<tr><td>Acceleration</td><td>1 to “Max ACC/DEC” of the basic parameter</td><td>The acceralation to reach to the Speed (Unit: mm/s^2)</td></tr>
<tr><td>Deceleration</td><td>1 to “Max ACC/DEC” of the basic parameter</td><td>The deceleration to reach to the Speed (Unit: mm/s^2)</td></tr>
<tr><td>Pushing force</td><td>1 to “Max force” of the basic parameter</td><td>The setting to define the pushing operation or the positioning operation.
For the positioning operation, the value specifies the force as the percentage against the maximum force (Unit: %).
* The maximum force changes depending on the actuator. Please refer to the manual and the rated force of the actuator.
<table>
<tr><th>Value</th><th>Operation</th><th>Description</th></tr>
<tr><td>0</td><td>Positioning operation</td><td>The actuator moves to the position specified in the “Position.</td></tr>
<tr><td>1-100</td><td>Pushing operation</td><td>The actuator moves to the position specified in the “Position” and then, performs a pushing action with a force not more than the set force.</td></tr>
</table></td></tr>
<tr><td>Trigger LV</td><td>1 to “Max force” of the basic parameter”</td><td>* Effective only for the pushing operation (when the value for the “Pushing force” is from 1 to 100).
This is the setting to define the conditions where the INP will be turned ON. When the actuator generates a force over this value, INP will be turned ON. (Unit: %)
For the positioning operation, this value is ignored.</td></tr>
</table>

<table>
<tr><td>Pushing speed</td><td>1 to “Max force” of the basic parameter</td><td>* Effective only for the pushing operation (when the value for the “Pushing force” is from 1to 100).
This defines the movement speed during the pushing operation. If this Speed is too high, it may cause damage to the actuator or work piece due to impacts. Therefore, enter a value within the range appropriate for the actuator. (Unit: mm/s)
* Please refer to the actuator manual for the appropriate range of the speed.
* For the positioning operation, this value is ignored.</td></tr>
<tr><td>Moving force</td><td>* 1</td><td>The setting to define the maximum torque during the positioning operation. (Unit: %)
Enter a value within the range appropriate for the actuator. (Unit: mm/s).
* Please refer to the actuator manual for the appropriate range of the speed.</td></tr>
<tr><td>Area1</td><td>“Stroke (-)” to “Stroke (+)” of the basic parameter</td><td rowspan="2">The setting to define the conditions where the AREA output will be turned ON (Unit: mm).
If the current position is within the range between the Area1 and Area2, the AREA output will be turned ON.
* If Area1 >Area2, the alarm “Step Data ALM1” will be activated.
(However,no alarm is generated if “Area1”= “Area2”= 0, the AREA output will be turned OFF)</td></tr>
<tr><td>Area2</td><td>“Stroke (-)” to “Stroke (+)” of the basic parameter</td></tr>
<tr><td>In position</td><td>* 1</td><td>The functions of this will be different between the pushing operation and the positioning operation.
* Positioning operation: Positioning range (Unit: mm)
* Pushing operation: Pushing distance (Unit: mm)
<table>
<tr><th>Operation</th><th>Description</th></tr>
<tr><td>Positioning operation</td><td>This is the setting to define the conditions where the INP output will be turned ON.
When the actuator enters within this range from the target position, the INP will be turned ON.
(It is unnecessary to change this from the initial value.)
If it is required to get a signal before the actuator completes the positioning operation, this value should be larger.
* The INP output will be turned on. Target position - in position ≦ actuator position ≦ target position + in position</td></tr>
<tr><td>Pushing operation</td><td>This is the setting to define the distance pushed by the actuator during the pushing operation.
When the actuator pushed exceeding this distance, the pushing operation will end.
In case of such stop exceeding the pushing distance, the INP will not be turned ON.</td></tr>
</table></td></tr>
</table>

* 1: The range varies depending on the actuator. Please refer to the manual of the actuator for more details.

7.2 Basic parameter

The “Basic parameter” is the data to define the operating conditions of the controller, conditions of the actuator, etc.

Details of basic parameter

Activation: “XX” = Become effective just after recorded into the controller
“X” = Become effective after restarting the controller
“-“ = The parameter cannot be changed (fixed value)

Parameter name	Range	Description	Acti-vation
Controller ID	1 to 32	Identification number (axis) parameters of serial communications are set.	X
IO pattern	Fixed value	This is the fixed value for this controller (* It should not be changed). The value for this should be 64(Standard).	-
ACC/DEC pattern	Fixed value	This is the fixed value for this controller (* It should not be changed). This defines the trapezoid acceleration/deceleration parameter.	-
S-motion rate	Fixed value	This is the fixed value for this controller (* It should not be changed).	-
Stroke (+)	* 1	This defines the positive (+) side limit of the position. (Unit: mm) Any value greater than the [stroke(+)] value cannot be entered in the “Position” field data of step parameter setup.	XX
Stroke (-)	* 1	This defines the negative (-) side limit of the position. (Unit: mm) Any value less than the [stroke(-)] value cannot be entered in the “Position” field data of step parameter setup.	XX
Max speed	* 1	This defines the maximum limit of the speed (Unit: mm/s). Any value greater than the [Max speed] value cannot be entered in the “Speed” field data of step parameter setup.	XX
Max ACC/DEC	* 1	This defines the maximum limit of the ACC/DEC (Unit: mm/s^2). Any value greater than the [Max ACC/DEC] value cannot be entered in the “Accel” field data of step parameter setup.	XX
Def In position	* 1	This defines the range to activate the INP output when the actuator is within it after the return to origin operation. (Unit: mm)	XX

ORIG offset	* 1	This defines the position of the actuator after the return to origin operation. (Unit: mm) * The ORIG offset is 0 (mm). 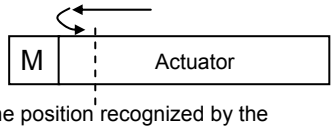 The position recognized by the controller after the return to the origin operation (0mm). * The ORIG offset is 100 (mm). 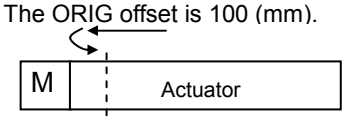 The position is identified by the controller after the return to the origin operation (100mm). Between the left examples, the actuator positions are not different but the reference point that the controller recognizes will be changed after the return to origin operation. **⚠ Caution** If the value for the "ORIG offset" is changed, the "Stroke (+)" and "Stroke (-)" of the basic parameter should be checked.	XX
Max force	* 1	The maximum force for the pushing operation (Unit: %).	XX
Para protect	1 to 2	Sets the range in which parameter and step data can be changed. 1. Basic parameter + Step data（Basic parameter + Return to origin parameter + Step data） 2. Basic parameter（Basic parameter + Return to origin parameter）	XX
Enable SW	1 to 2	This defines the status of the Enable switch of the teaching box. 1. Enable 2. Disable	XX
Unit name	Fixed value	Indication of actuator type compatible to the controller. (* It should not be changed).	-
W-AREA1	Fixed value	This is the fixed value for this controller (* It should not be changed).	-
W-AREA2	Fixed value	This is the fixed value for this controller (* It should not be changed).	-
ORG Correct [Link Offset]	Fixed value	This is the fixed value for this controller (* It should not be changed).	-
Sensor type	Fixed value	This is the fixed value for this controller (* it should not be changed)	-
Option 1	Fixed value	This is the fixed value for this controller (* it should not be changed)	-
Undefine No.11	Fixed value	This is the fixed value for this controller (* it should not be changed)	-
Undefine No.12	Fixed value	This is the fixed value for this controller (* it should not be changed)	-

* 1: The range varies depending on the actuator. Please refer to the manual of the actuator for more details.

7.3 Return to origin parameter

The “Return to origin parameter” is the setting data for the return to origin operation.

Details of Return to origin parameter

Activation: “XX” = Become effective just after recorded into the controller,

“X” = Become effective after restarting the controller,

“-“ = The parameter cannot be changed (fixed value).

Name	Range	Description	Acti-vation
ORIG direction	1 to 2	Sets the direction of return to origin operation. 1. CW 2. CCW *1	X
ORIG mode	1 to 2	The setting for the return to origin operation 1. pushing origin operation [Stop] 2. limit switch origin [Sensor]	XX
ORIG limit	* 1	A pushing force level at which to set the origin.	XX
ORIG time	Fixed value	This is the fixed value for this controller (* It should not be changed).	-
ORIG speed	* 1	The allowable speed to move to origin.	XX
ORIG ACC/DEC	* 1	The acceleration and deceleration during find origin.	XX
Creep speed	Fixed value	This is the fixed value for this controller (* It should not be changed).	-
ORIG sensor	0 to 2	The setting for ORIG sensor 0. The origin sensor is not effective. [Disable] 1. The origin sensor is N.O type. [N.O]. 2. The origin sensor is N.C type. [N.C.]	XX
ORIG SW DIR	Fixed value	This is the fixed value for this controller (* it should not be changed)	-
Undefine No.21	Fixed value	This is the fixed value for this controller (* it should not be changed)	-

* 1: These vary depending on the actuator. Please refer to the manual of the actuator for more details.

8. Return to origin

8.1 Return to origin

After entering the setting data, it is necessary to perform a return to origin operation (to establish the origin point) before starting the positioning or pushing operation.

* The return to origin direction is dependent on the actuator.

■ Return to origin operation

The actuator moves in the return to origin direction (* this direction is dependent on the actuator) from the initial position at the moment of power-on: See (1) in the diagram below.

When the actuator reaches the end of travel limit it pauses for a short time. The controller recognizes the position as the end of travel limit of the actuator. Then, the actuator moves at a low speed in the direction opposite to the return to origin direction: See (2) in the diagram below.

Return to origin signal → Move in the return to origin direction → Stop the movement → Move in the opposite direction → Origin position

(Example) Return to origin operation

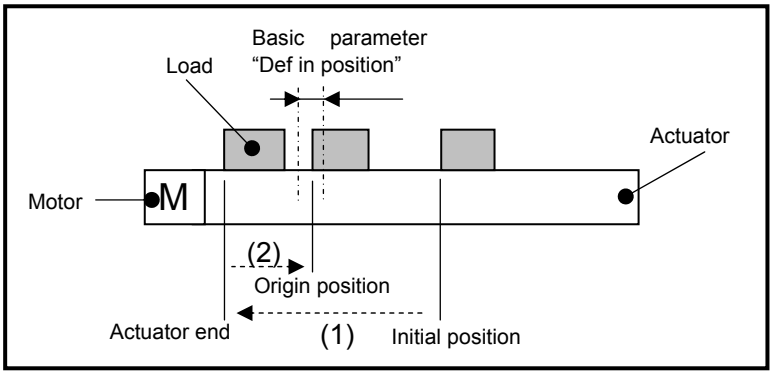

⚠Caution

This direction is dependent on the actuator.

8.2 Positioning operation

* Step data "Pushing force" is 0.

The actuator moves to the target position specified by the step data "Position."

*** Positioning operation (Example)**

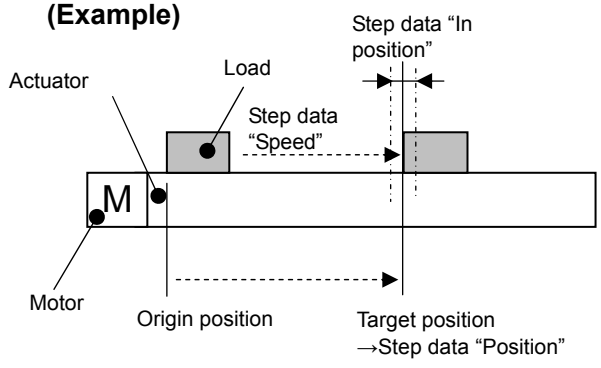

*** Positioning operation [Speed/Position] (Example)**

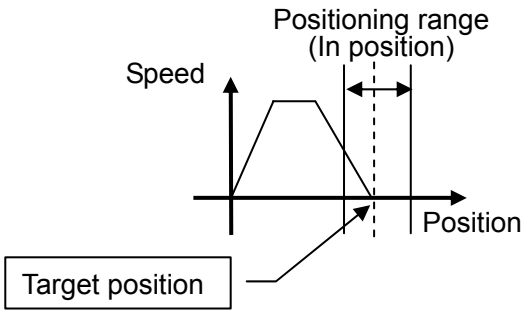

8.3 Pushing operation

The pushing operation is active when a Value greater than “1” is set in the Step data"pushing force". Similar to the positioning operation, the actuator moves according to the settings of “Position” and “Speed” in the step data and then, when it reaches to the target position, it starts the pushing process. The actuator pushes the load with the force no more than the maximum force set in the “Pushing force” of the step data.

(1) Pushing operation is successfully performed.

During the pushing operation, if the pushing force is kept higher than the value specified by “Trigger LV” of the step data for a certain time, the INP output will be turned ON. Even after this completion of pushing operation, the actuator keeps generating the force setup in the step data.

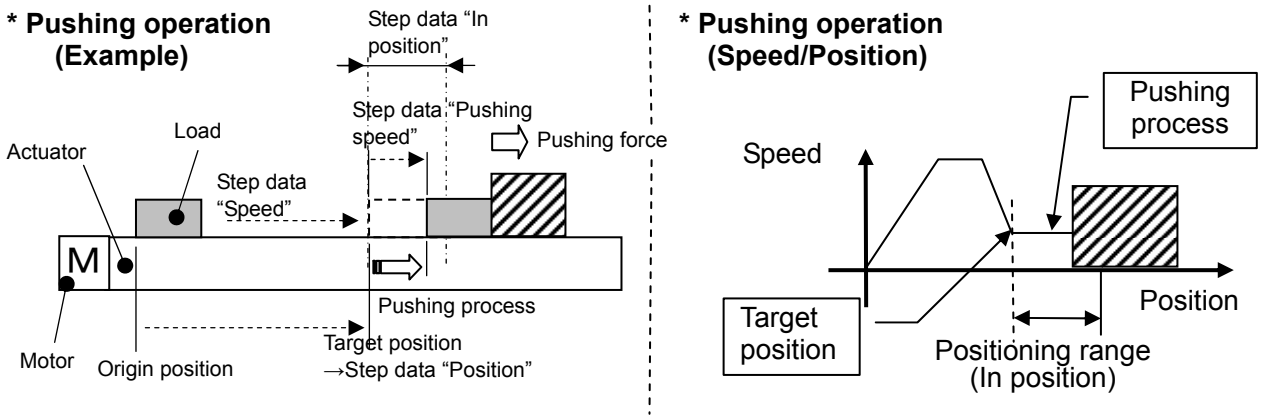

(2) Pushing operation is failed (pushing the air).

If the pushing process is not completed even after the actuator runs over the range specified in the step data from the target position (the starting point of the pushing process), the operation will be completed. In such case, the INP output will be turned OFF.

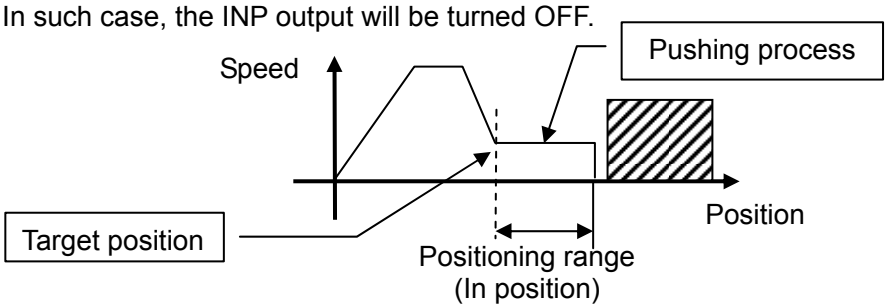

(3) Movement of the workpiece after the completion of the pushing process

(1) Movement of the workpiece in the pushing direction

After completion of the pushing operation, if the reaction force from the workpiece becomes smaller, the actuator may move with a force smaller than that specified in the “TriggerLV” of the step data.

In such case, the INP output will be turned OFF and the actuator moves within the positioning range according to the balance of the force.

If the pushing force is kept higher than the value specified by “Trigger LV” of the step data for a certain time again, the INP output will be reactivated.

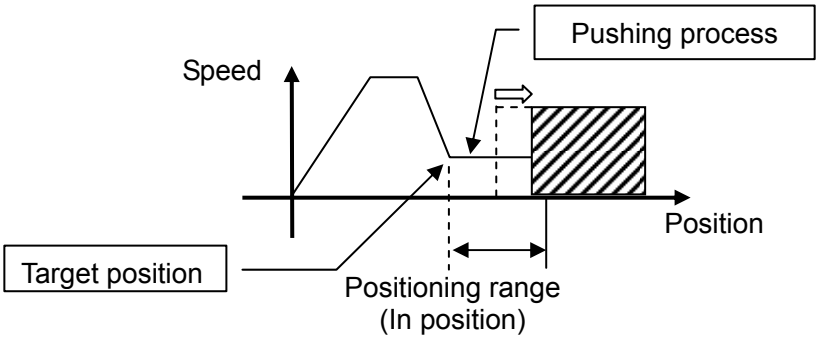

(2) Movement of the workpiece in the direction opposite to the pushing direction

(The actuator is pushed back since the reaction force from the workpiece is too large.)

After completion of the pushing operation, if the reaction force from the workpiece becomes larger, the actuator may be pushed back. In such case, while the INP output is kept be ON, the actuator will be pushed back to the point where the reaction force and the actuator pushing force are balanced (pushed back toward the target position). If the actuator is pushed back over the target position, the alarm (ORIG ALM) will be activated.

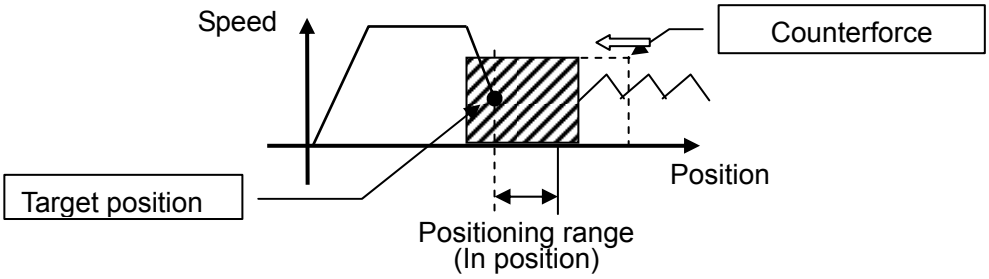

8.4 Controller input signal response time

The factors that may cause the controller to delay's in responding to the input signal are as follows:

(1) The controller delayed in scanning the input signal.

(2) The analysis and computing of the input signal is delayed.

(3) The analysis and processing of the command is delayed.

Leave an interval of 15 ms (30 ms if possible) or more between input signals and maintain the state of the signal for 30ms or more, as PLC processing delays and controller scaning delays can occur.

8.5 Methods of interrupting operation

There are two methods of interrupting operation and stopping the actuator during positioning operation and pushing operation, as shown below. The state after stopping is different, so use the method appropriate to the application.

[Stopping by EMG signal]

If the EMG signal is turned OFF during operation, after the actuator decelerates and stops, the servo will turn OFF so the stopped position is not held. (For an actuator with lock, it is held by the lock function.)

[Stopping by RESET signal]

If the RESET signal is turned ON during operation, after the actuator decelerates and stops, the stopped position is held. (The servo does not turn OFF.)

[Stopped by HOLD signal]

The actuator decelerates to stop when HOLD signal is ON during operation.

⚠Caution
If instructed to stop by EMG signal and RESET signal, all OUT signals will turn OFF.

9. Operation (example)

9.1 Positioning operation

Example) Move an actuator from the origin to 50mm point with 100mm/s. (Using Step No.1)
Next, it shows setting example to move the actuator from the 50mm point to 100mm point by moving it 5 times continuously, 10mm at a time, with a speed of 50 mm/s.(Step No. 2)

1. [Normal mode] Step data example

No.	Movement MOD	Speed mm/s	Position mm	Acceleration mm/s^2	Deceleration mm/s^2	Pushing force %	Trigger LV %	Pushing speed mm/s	Moving force %	Area1 mm	Area2 mm	In position mm
0	-	-	-	-	-	-	-	-	-	-	-	-
1	Absolute	100	50.00	1000	1000	0	0	0	100	0	0	0.1
2	Relative	50	10.00	1000	1000	0	0	0	100	0	0	0.1

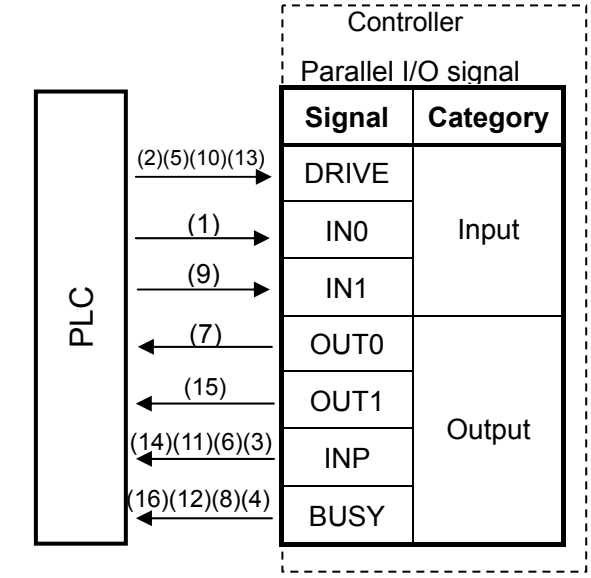

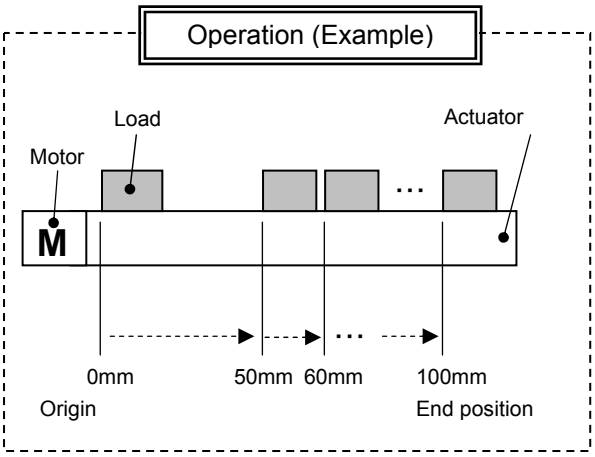

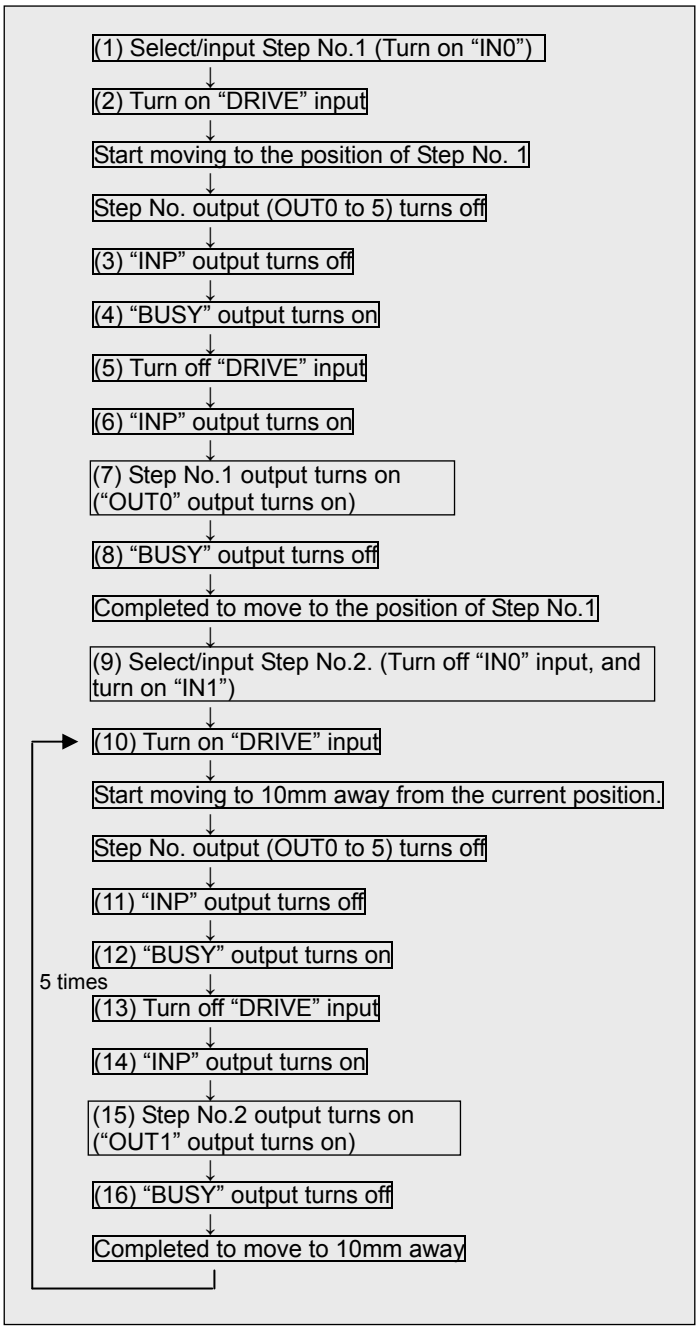

9.2 Pushing operation

Example) Move an actuator from the origin to 100mm point with 100mm/s. (Using Step No.1)
From the 100mm point, the actuator starts the pushing operation of 10mm/s speed and 50% or less force (the pushing distance is up to 5mm). Then, the actuator moves from the position where the pushing operation was completed (where INP was turned on) to the 50mm point with 50mm/s. (Using Step No.2)
[Normal mode] Step data example

No.	Movement MOD	Speed mm/s	Position mm	Acceleration mm/s^2	Deceleration mm/s^2	Pushing force %	Trigger LV %	Pushing speed mm/s	Moving force %	Area1 mm	Area2 mm	In position mm
0	-	-	-	-	-	-	-	-	-	-	-	-
1	Absolute	100	100.00	1000	1000	50	40	10	100	0	0	5
2	Absolute	50	50.00	1000	1000	0	0	0	100	0	0	0.1

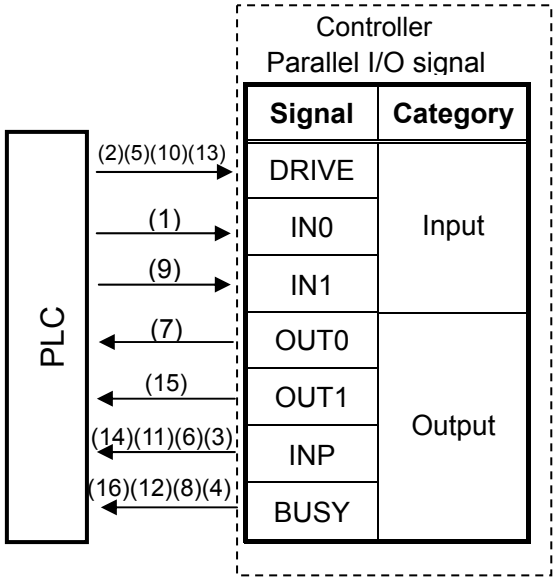

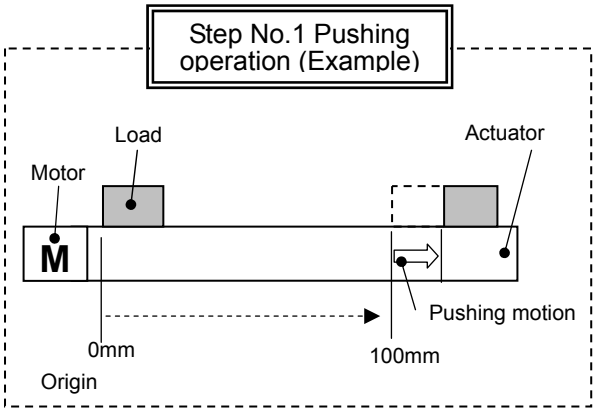

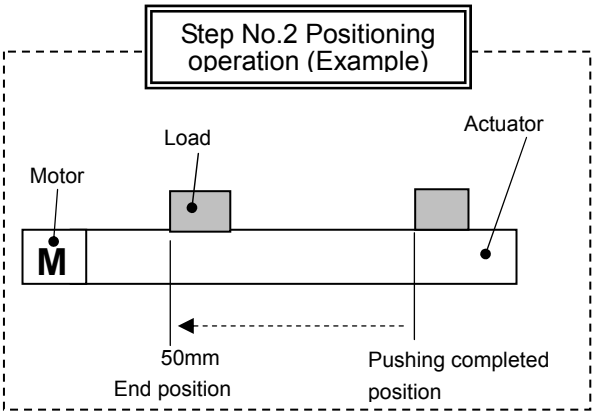

(1) Select/input Step No.1 (Turn on "IN0")
↓
(2) Turn on "DRIVE" input
↓
Start moving to the position of Step No. 1
↓
Step No. output (OUT0 to 5) turns off
↓
(3) "INP" output turns off
↓
(4) "BUSY" output turns on
↓
(5) Turn off "DRIVE" input
↓
Move at low speed after passing the "Position" of the Step No.1
↓
Push the workpiece with the specified pushing force
↓
(6) "INP" output turns on
↓
(7) Step No.1 output turns on ("OUT0" output turns on)
↓
(8) "BUSY" output turns off
↓
Completed to move to the position of Step No.1
↓
(9) Select/input Step No.2. (Turn off "IN0" input, and turn on "IN1")
↓
(10) Turn on "DRIVE" input
↓
Start moving to 50mm away from the current position.
↓
Step No. output (OUT0 to 5) turns off
↓
(11) "INP" output turns off
↓
(12) "BUSY" output turns on
↓
(13) Turn off "DRIVE" input
↓
(14) "INP" output turns on
↓
(15) Step No.2 output turns on ("OUT1" output turns on)
↓
(16) "BUSY" output turns off
↓
Completed to move to the "Position" of the Step No.2

10. Operation instruction

10.1 Outline of the operation instruction

The operation of the actuator can be achieved by specifying the number of step data recorded in the controller via the I/O signal.

An effective state of the parallel I/O signal is shown in the following.

10.2 Procedures with the Parallel I/O

Please refer to the following “Procedures” and “Timing chart” for each operation.

[1] Power on → Return to origin

- Procedures-

(1) Apply the power.

↓

(2) ALARM is turned ON.

ESTOP is turned ON.

↓

(3) SVON is turned ON.

↓

(4) SVRE is turned ON.

(lock release)

* The time [SVRE] output turns ON is dependant on the type of actuator and the customer usage.

↓

(5) SETUP is turned ON.

↓

(6) BUSY is turned ON.

(The actuator moves.)

↓

(7) SETON and INP are turned ON.

When the BUSY output is turned OFF, the return to origin operation has been completed.

- Timing chart-

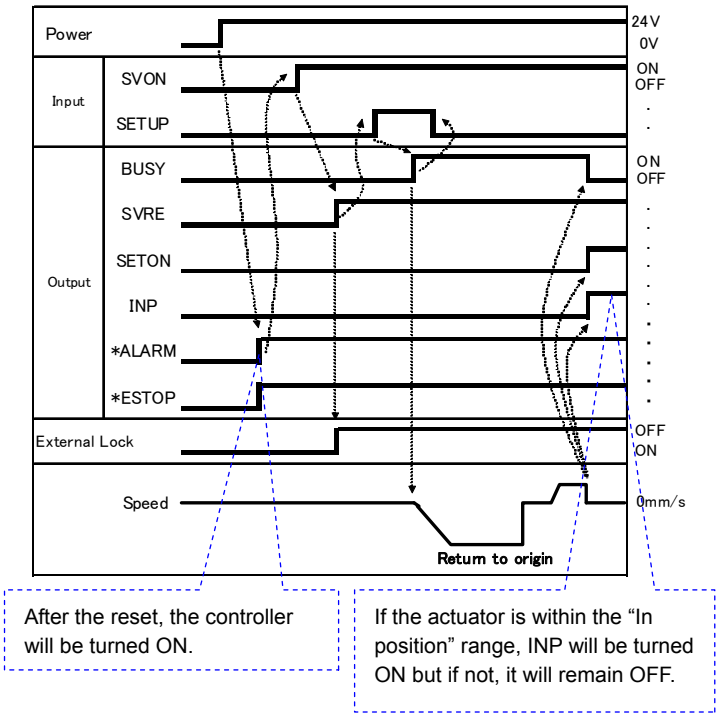

* The “ALARM” and “ESTOP” are expressed as negative-logic circuit.

[2] Positioning operation

- Procedures-

(1) Input step data No. (IN0 to IN5)

↓

(2) DRIVE is turned ON.

→Scan the step data number (from IN0 to IN5).

* Then, if DRIVE is turned OFF, the step data number will be output (from the output OUT0 to OUT5).

↓

(3) BUSY is turned ON.

(The positioning operation starts.)

↓

(4) When INP turns ON and BUSY turns OFF, the positioning operation will be completed.

-Timing chart-

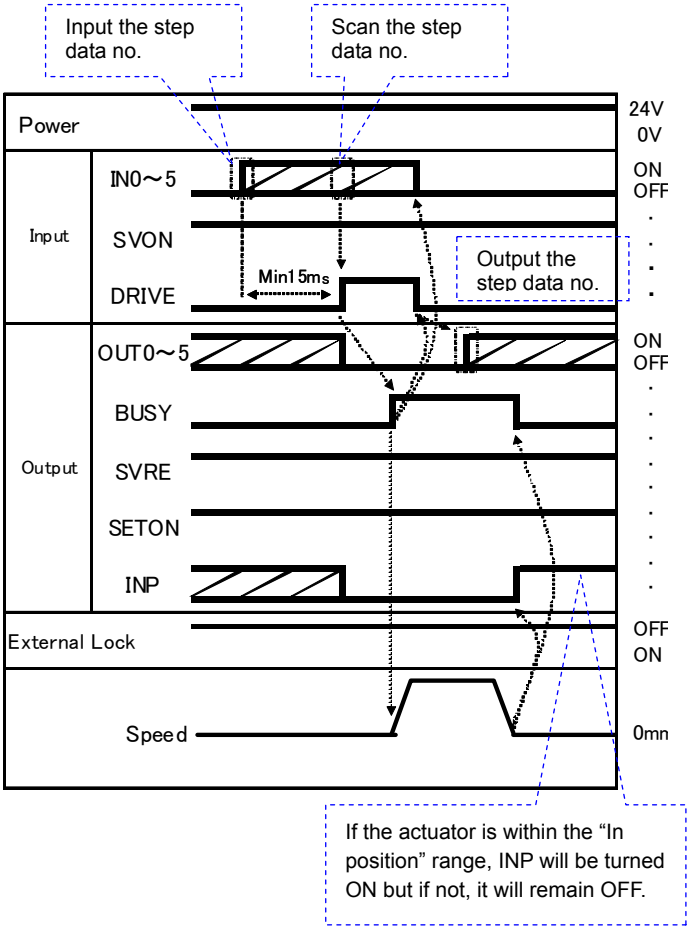

[3] Pushing operation

- Procedures-

(1) Input step data No. (IN0 to IN5)

↓

(2) DRIVE is turned ON. (OUT0-5 is turned off.)

→Scan the step data number (from IN0 to IN5).

* After this, if DRIVE is turned OFF, the step data number will be output (from the outputs OUT0 to OUT5).

↓

(3) BUSY is turned ON.

↓

(4) When INP output is turned ON and BUSY is turned OFF, the pushing operation will be completed (the actuator generates the force larger than that specified in “TriggerLV” of the step data).

- Timing chart -

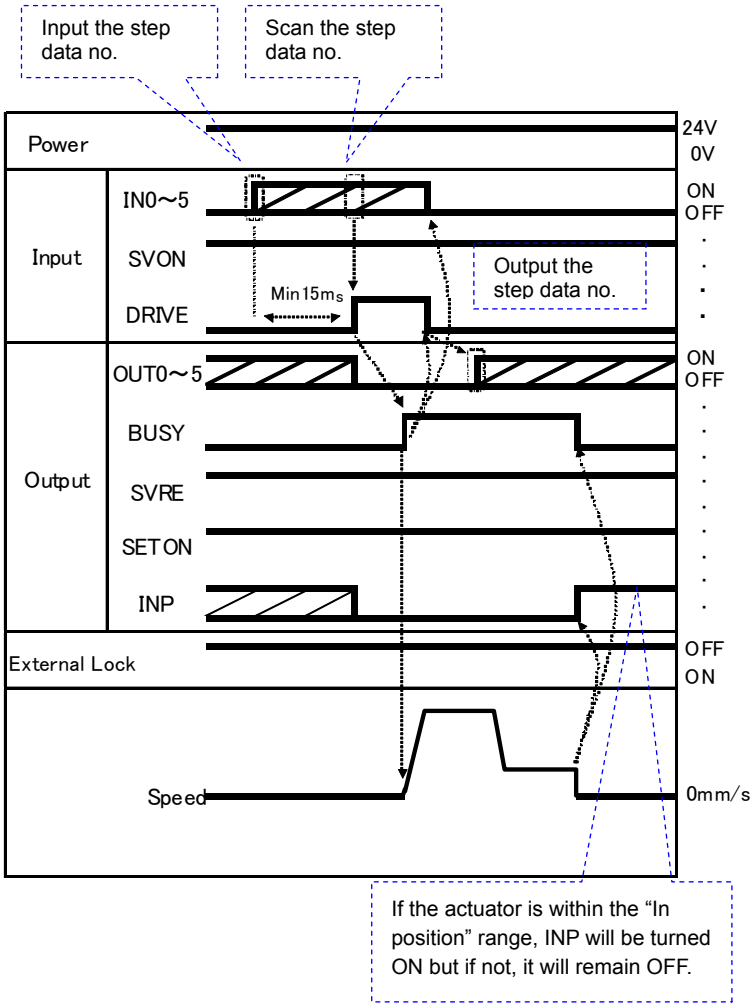

[4] HOLD

-Procedures-

(1) HOLD is turned ON during the operation (when HOLD is ON).

↓

(2) BUSY is turned OFF (the actuator stops).

↓

(3) HOLD is turned OFF.

↓

(4) BUSY is turned ON (the actuator restarts).

[5] Reset

-Procedures- [Driving reset]

(1)RESET is turned ON during the operation (BUSY output is ON).

↓

(2) BUSY output, OUT0 to OUT3 output is OFF.

-Procedures- [Alarm reset]

(1) An alarm is activated(ALARM is turned OFF and the output OUT0 to OUT3 is turned ON.)

↓

(2) RESET is turned ON.

↓

(3) ALARM is turned ON and the output OUT0 to OUT3 is turned OFF (the alarm is deactivated).

[6] Stop

-Procedures-

(1) The stop [EMG] input is turned OFF during the operation (when BUSY is ON). [stop command]

↓

(2) ESTOP is turned OFF.

↓

(3) BUSY is turned OFF (the actuator stops). SVRE is turned OFF (if the actuator has a lock).

↓

(4) The stop [EMG] input is turned ON. [The stop release command]

↓

(5) STOP is turned ON.

* SVRE is turned ON. (lock release)

(* If the actuator has a lock.)

-Timing chart-

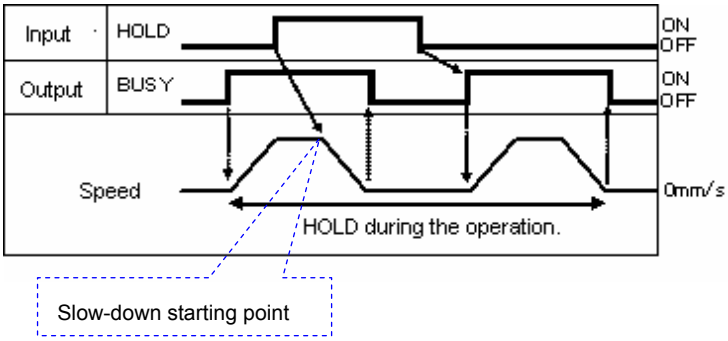

-Timing chart- Driving reset

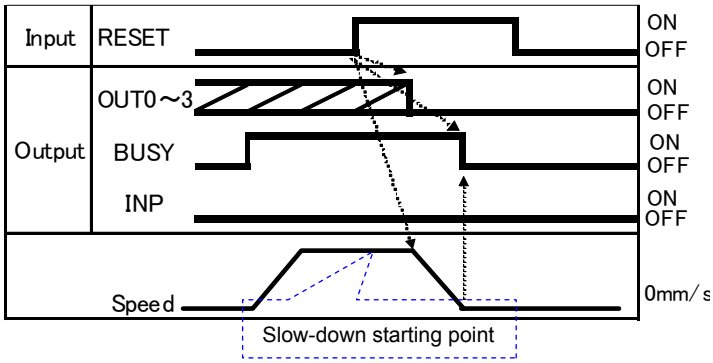

-Timing chart- Alarm reset

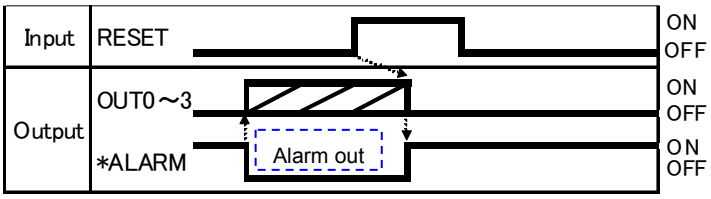

* The “ALARM” is expressed as negative-logic circuit.

-Timing chart-

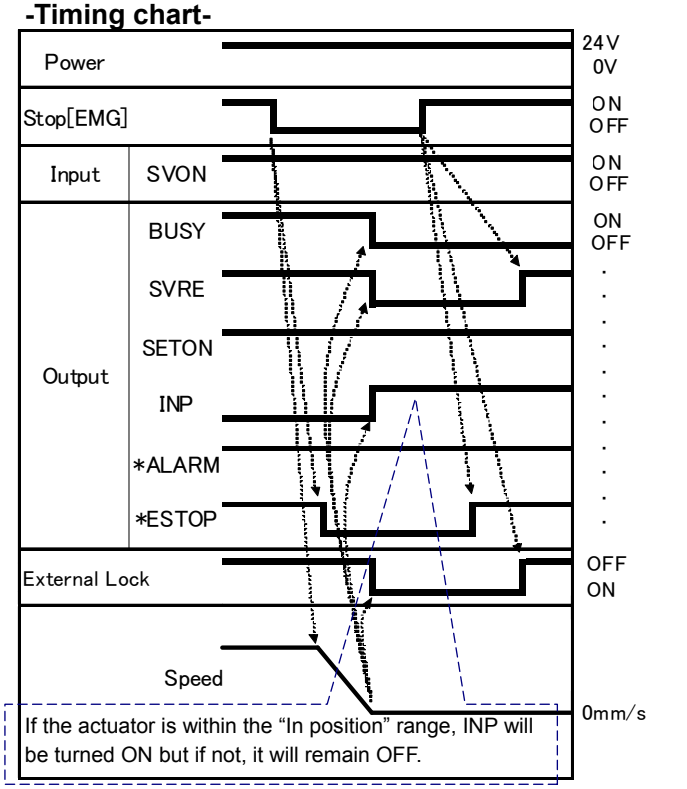

* The “ALARM” and “ESTOP” are expressed as negative-logic circuit.

* When "Stop" is OFF, the stop is activated.

[7] Area output

-Procedures-

* Operation of Step Data No.1

(1) Input step data No. (IN0 to IN5).

↓

(2) DRIVE is turned ON.

→ Receive the step data no.1 (from the input IN0 to IN5).

* Then, if the DRIVE is turned OFF, the step data will be output (from the output OUT0 to OUT5).

↓

(3) BUSY is turned ON.

(The actuator starts the operation).

INP is turned OFF.

↓

(4) AREA output is turned ON for the step data no.1 (at 150mm from the origin point).

↓

(5) BUSY is turned OFF.

(The actuator stops.)

INP is turned ON.

↓

* Operation of Step Data No.2

(6)Input step data No. (IN0 to IN5).

↓

(7) DRIVE is turned ON.

→ Receive the step data no.2 (from the input IN0 to IN5).

* Then, if the DRIVE is turned OFF, the step data will be output (from the output OUT0 to OUT5).

↓

(8) AREA is turned OFF.

BUSY is turned ON. (The actuator starts the operation.)

↓

(9) AREA output is turned ON for the step data no.2 (at 170mm from the origin point).

↓

(10)AREA output is turned OFF for the step data no.2 (at 130mm from the origin point).

↓

(11)BUSY is turned OFF.

(The actuator stops.)

INP is turned ON.

-Timing chart-

Example:

The initial position: 50mm

Operation of step data No.1: Position: 200mm, Area1-Area2: 150-250mm

Operation of step data No.2: Position: 100mm, Area1-Area2: 130-170mm

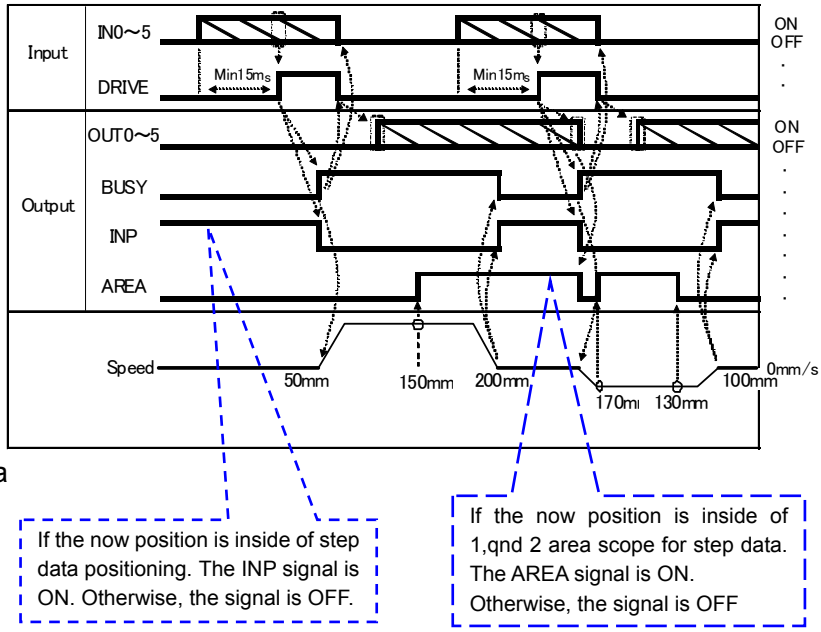

If the now position is inside of step data positioning. The INP signal is ON. Otherwise, the signal is OFF.

If the now position is inside of 1,qnd 2 area scope for step data. The AREA signal is ON. Otherwise, the signal is OFF

11. Option

11.1 Actuator cable (5m or less)

LE - CP - □□

Cable length (L)

1	1.5m
3	3m
5	5m

Actuator cable type

Nil	Robot cable
S	Standard cable

①

signal	Tarminal no.
A	B-1
$\overline{A}$	A-1
B	B-2
$\overline{B}$	A-2
COM-A/COM	B-3
COM-B/ -	A-3
Vcc	B-4
GND	A-4
$\overline{A}$	B-5
A	A-5
$\overline{B}$	B-6
B	A-6

②

Cable color	Tarminal no.
Brown	2
Red	1
Orange	6
Yellow	5
Green	3
Blue	4

Shield

③

Cable color	Tarminal no.
Brown	12
Black	13
Red	7
Black	6
Orange	9
Black	8
-	3

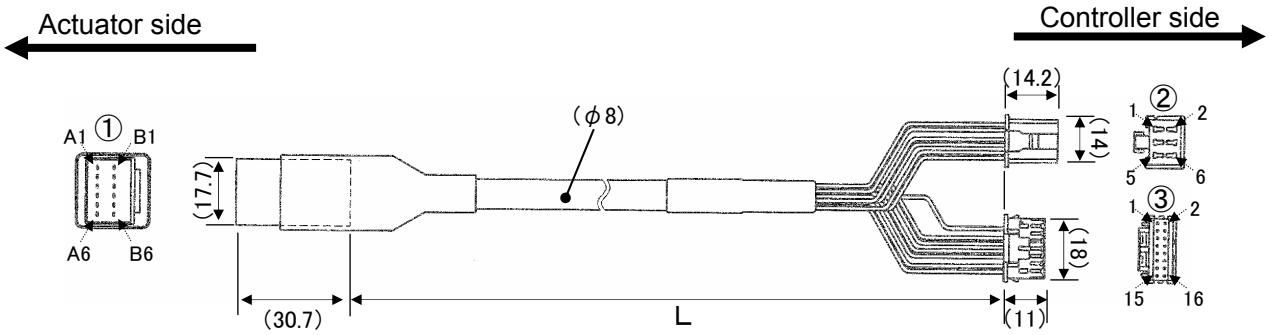

11.2 Actuator cable (8-20m)

LE - CP - □

Cable length (L)

8	8m*
A	10m*
B	15m*
C	20m*

*produced upon receipt of order

* Only "Robotic type cable" can be selected.

①

signal	Tarminal no.
A	B-1
$\overline{A}$	A-1
B	B-2
$\overline{B}$	A-2
COM-A/COM	B-3
COM-B/ -	A-3
Vcc	B-4
GND	A-4
$\overline{A}$	B-5
A	A-5
$\overline{B}$	B-6
B	A-6

②

Cable color	Tarminal no.
Brown	2
Red	1
Orange	6
Yellow	5
Green	3
Blue	4

Shield

③

Cable color	Tarminal no.
Brown	12
Black	13
Red	7
Black	6
Orange	9
Black	8
-	3

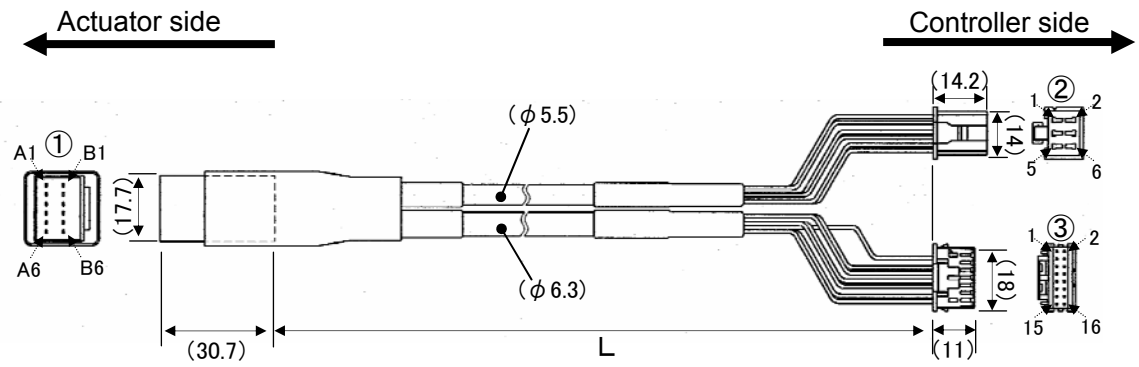

11.3 Actuator cable for with lock (5m or less)

LE - CP - □□- B

Cable length (L)

1	1.5m
3	3m
5	5m

Actuator cable type

Nil	Robot cable
S	Standard cable

①

signal	Tarminal no.
A	B-1
$\overline{A}$	A-1
B	B-2
$\overline{B}$	A-2
COM-A/COM	B-3
COM-B/ -	A-3
Vcc	B-4
GND	A-4
$\overline{A}$	B-5
A	A-5
$\overline{B}$	B-6
B	A-6

②

Cable color	Tarminal no.
Brown	2
Red	1
Orange	6
Yellow	5
Green	3
Blue	4

Shield

③

Cable color	Tarminal no.
Brown	12
Black	13
Red	7
Black	6
Orange	9
Black	8
-	3

④

signal	Tarminal no.
Lock(+)	B-1
Lock(−)	A-1
Sensor(+)	B-3
Sensor(−)	A-3

Red	4
Black	5
Brown	1
Blue	2

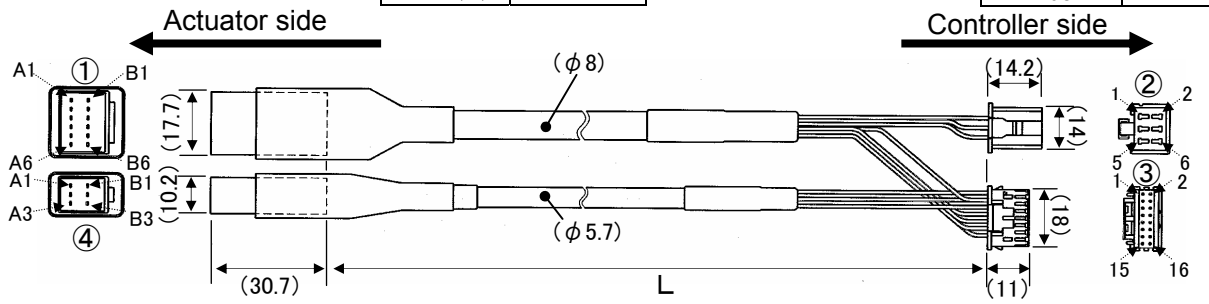

11.4 Actuator cable for with lock (8-20m)

LE - CP - □ - B

Cable length (L)

8	8m*
A	10m*
B	15m*
C	20m*

*produced upon receipt of order

* Only "Robotic type cable" can be selected.

①

signal	Tarminal no.
$\overline{A}$	B-1
A	A-1
$\overline{B}$	B-2
B	A-2
COM-A/COM	B-3
COM-B/ -	A-3
Vcc	B-4
GND	A-4
$\overline{A}$	B-5
A	A-5
$\overline{B}$	B-6
B	A-6

②

Cable color	Tarminal no.
Brown	2
Red	1
Orange	6
Yellow	5
Green	3
Blue	4

Shield

③

Cable color	Tarminal no.
Brown	12
Black	13
Red	7
Black	6
Orange	9
Black	8
-	3

④

signal	Tarminal no.
Lock(+)	B-1
Lock(−)	A-1
Sensor(+)	B-3
Sensor(−)	A-3

Red	4
Black	5
Brown	1
Blue	2

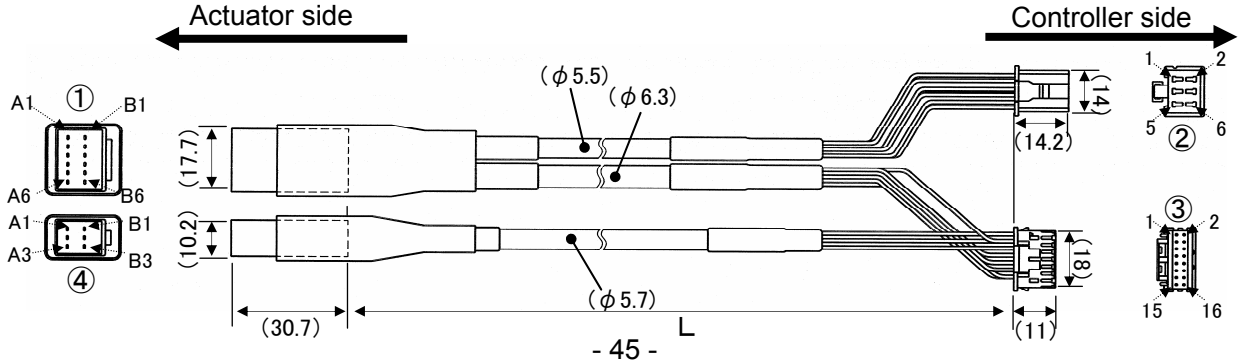

11.5 I/O Cable

LEC – CN5 – □

Cable length(L)

1	1.5m
3	3m
5	5m

Pin No.	# of wire	Color of insulation	Dot mark	Dot color
A1	1	Light brown	■	Black
A2		Light brown	■	Red
A3	2	Yellow	■	Black
A4		Yellow	■	Red
A5	3	Light green	■	Black
A6		Light green	■	Red
A7	4	Grey	■	Black
A8		Grey	■	Red
A9	5	White	■	Black
A10		White	■	Red
A11	6	Light brown	■■	Black
A12		Light brown	■■	Red
A13	7	Yellow	■■	Black

Pin No.	# of wire	Color of insulation	Dot mark	Dot color
B1	7	Yellow	■■	Red
B2	8	Light green	■■	Black
B3		Light green	■■	Red
B4	9	Grey	■■	Black
B5		Grey	■■	Red
B6	10	White	■■	Black
B7		White	■■	Red
B8	11	Light brown	■■■	Black
B9		Light brown	■■■	Red
B10	12	Yellow	■■■	Black
B11		Yellow	■■■	Red
B12	13	Light green	■■■	Black
B13		Light green	■■■	Red
-	Shield			

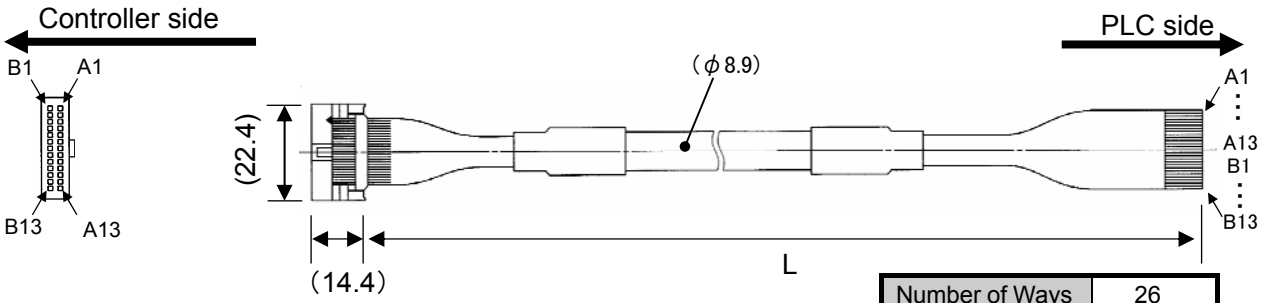

Number of Ways	26
AWG	AWG28

11.6 Controller setting kit

LEC – W1

Controller setting kit

Contents

(1) Controller setting software (CD-ROM)
(2) Communication cable
(3) Conversion unit
(4) USB cable

Hardware requirements

PC/AT compatible machine installed with Windows XP and equipped with USB1.1 or USB2.0 ports.

*Windows® and Windows XP® are registered trade marks of Microsoft Conporation.

11.7 Teaching box

LEC – T1 – 3 E G □

Teaching box

Cable length

3	3m

Initial language

E	English
J	Japanese

Stop switch

G	Equipped with stop switch

Enable switch

Nil	No enable switch
S	Equipped with enable

Dimensions

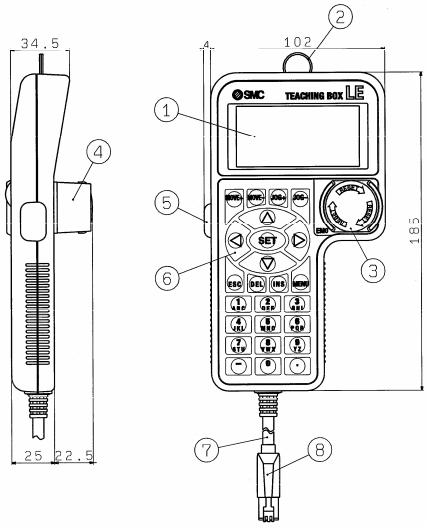

No	Name	Function
(1)	LCD	Liquid crystal display (with backlight)
(2)	Ring	The ring to hang the teaching box.
(3)	Stop switch	Pressing down to lock this, controlled stop will be activated. Turn clockwise to release the lock.
(4)	Stop guard	Protector for the stop switch
(5)	Enable switch (Option)	Switch to prevent unintentional operation of Jog test function. * Does not apply to other functions e.g.
(6)	Key switch	Entry switches
(7)	Cable	3m length
(8)	Connector	The connector to be connected to the CN4 of the controller

12. Alarm Detection

The details of the alarm can be checked using a PC (the controller setting software) or the teaching box.
* Please refer to the manuals of the controller setting software or the teaching box for how to check the details of the alarms.

Please refer to section **"12.2 Alarm details (page49)"** of this manual on how to, deactivate the alarm. There are two types of alarms: the ones that can be deactivated by the RESET input via the parallel communication and the other that can be deactivated by cycling the controller power supply (C24V).

12.1 Parallel output for the alarm group

In case of an alarm, this controller outputs a signal that informs the type of alarm.

The type of alarm is classified into 5 groups and output from OUT0 to OUT3.

The status of output terminal for each alarm group is as follows:

Alarm group	Parallel output				
	*ALARM	OUT0	OUT1	OUT2	OUT3
Alarm group A	OFF	ON	OFF	OFF	OFF
Alarm group B	OFF	OFF	ON	OFF	OFF
Alarm group C	OFF	OFF	OFF	ON	OFF
Alarm group D	OFF	OFF	OFF	OFF	ON
Alarm group E	OFF	OFF	OFF	OFF	OFF

* The "ALARM" is expressed as negative-logic circuit.

When the alarm has activated, the status of output terminal will be as follows:

Alarm group	Parallel output		Procedure of restart
	SVRE	SETON	
Alarm group A	There is no change.	There is no change.	RESET input
Alarm group B	There is no change.	There is no change.	RESET input
Alarm group C	There is no change.	There is no change.	RESET input
Alarm group D	OFF	There is no change(*1)	RESET input(* 1)
Alarm group E	OFF	OFF	Power off ⇒Turn on the power again

(*1) But if controller version is below SV1.00, SETON turns OFF and it is necessary to input SETUP (step 2).

<Procedure to restart>

1. Input RESET → SVRE: automatically turned on (if SVON is ON when RESET is input)
2. Input SETUP → Instruction to restart after return to origin is completed

12.2 Alarm details

Alarm (code)	Group	How to deactivate	Alarm contents/Countermeasure
Step data ALM1 (1-048)	B	RESET input	**<Contents>**The step data is in-correct for the following conditions:(Assignable value range) (1) Area1 < Area2 (If both Area1 and Area2 is 0, the alarm will not be activated.) (2) TargetLV ≦ Pushing force (3) Minimum speed of actuator ≦ Pushing speed≦Speed (4) Pushing speed ≦ Maximum pushing speed of actuator (5) Pushing force ≦ Minimum pushing force of actuator (6) Basic parameters "Max force" ≦ Minimum pushing force of actuator (7) Basic parameters "Max force" ≦ Trigger LV **<Countermeasure>** Modify the step data and basic parameters setting. **⚠Caution** Please confirm this pushing force and minimum speeds of Data maximum speed and 0 or more of the actuator with the actuator manual or the catalog.
Parameter ALM (1-049)	B	RESET input	**<Contents>** The basic parameter is not correct for the following condition:(Assignable value range) (1) Stroke (-) < Stroke (+) (2) W-Area 1 < W-Area2(If both W-Area1 and W-Area2 is 0, the alarm will not be activated.) (3) Pushing speed ≦ Maximum pushing speed of actuator Maximum pushing force < Maximum pushing force of actuator **<Countermeasure>** Modify the basic parameter setting. **⚠Caution** Please refer to the manual or the catalogue of the actuator for the max/min pushing force/speed for the actuator.
Small Dec (1-050)	B	RESET input	**<Contents>** For an operation for a specific step data no., the actuator cannot stop within the stroke limit due to the value set for the "Deceleration" of the step data. **<Countermeasure>**Modify the Deceleration value to a value with a sufficient margin so that the actuator can stop within the stroke limit.
Step data ALM2 (1-051)	B	RESET input	**<Contents>** For an operation for a specific step data no., the requested number of the step data is not registered. (When operation is commanded through PLC, this alarm will be generated depending on the input signal interval and the holding time of signals) **<Countermeasure>** (1)Make sure that the "Movement MOD" of the step data is not "Blank (Disabled)". (2) Process delay of PLC or scanning delay of the controller may occur. Keep the input signal combination for 15 ms (30 ms if possible) or longer.**(2) Refer to Positioning (P.40)**

<table>
<tr><td>Stroke limit
(1-052)</td><td>B</td><td>RESET
input</td><td><Contents> The actuator goes out the stroke limit specified by the basic parameters, “Stroke (+)” and “Stroke (-)” if it performs the requested operation. (Including JOG operation after return to origin)
<Countermeasure> Make sure that the basic parameter, “Stroke (+)” and “Stroke (-)” are consistent with the distance of actuator movement specified in the step data.
⚠ Caution
If the “Movement MOD” of the step data is relative, pay attention to the starting point and distance of the actuator movement.</td></tr>
<tr><td>Pushing ALM
(1-096)</td><td>C</td><td>RESET
input</td><td><Contents> In the pushing operation, if push back is bigger than pushing operation, the push back is requested.
<Countermeasure> Increase the distance from the pushing operation origin position to the object being pushed. Or, increase the pushing force.</td></tr>
<tr><td>ORIG ALM
(1-097)</td><td>C</td><td>RESET
input</td><td><Contents> Return to origin is not completed within the set time.
<Countermeasure> Check whether the movement of the actuator is obstructed.</td></tr>
<tr><td>Servo off ALM
(1-098)</td><td>C</td><td>RESET
input</td><td><Contents> While the servo motor is off, the return to origin operation, positioning operation, pushing operation or JOG operation is requested.
<Countermeasure> Modify the setting so that those operations will be requested while the servo motor is ON (the SVON input is ON).</td></tr>
<tr><td>Drive ALM
(1-099)</td><td>C</td><td>RESET
input</td><td><Contents> A positioning operation or pushing operation is requested.
Before the return to origin position is completed.
<Countermeasure> Modify the setting so that those operations will be requested after the return to origin position is completed.</td></tr>
<tr><td>ORIG Sens ALM
(1-103)</td><td>C</td><td>RESET
input</td><td><Contents> Rreturn to origin parameter has the conditions shown below.
<table>
<tr><th rowspan="2"></th><th colspan="2">Parameter setting content</th></tr>
<tr><th>ORIG mode</th><th>ORIG sensor</th></tr>
<tr><td>1</td><td>limit switch origin [Sensor]</td><td>0. Disable
or
1. N.O
or
2. N.C.</td></tr>
<tr><td>2</td><td>pushing origin operation [Stop]</td><td>1. N.O.
or
2. N.C.</td></tr>
</table>
* Alarm is generated with condition above when the sensor is not mounted to the actuator.
<Countermeasure> Sensor installation and return to origin parameter and motor and sensor type is setting to have confirm.</td></tr>
</table>

Over speed (1-144)	D	RESET SVON Input (*1)	**<Contents>** The motor speed exceeds a specific level due to an external force, etc. **<Countermeasure>** Make improvements such that the motor speed will not exceed the maximum speed of the actuator. **⚠Caution** Please refer to the manual or the catalogue of the actuator for the maximum speed of the actuator.
Over motor Vol (1-145)	D	RESET SVON Input (*1)	**<Contents>**The motor power supply voltage is out of range.During [SVON] . **<Countermeasure>** Make sure that the voltage supplied to the motor power (M24V) of the controller is within specification. **⚠Caution** If the power supply is “rush-current restraining type”, a voltage drop may cause an alarm during the acceleration/deceleration. **<Contents>** Also, a regenerative electric power may cause an alarm due to the method of operation of the actuator. **<Countermeasure>** Make sure that the operating conditions are within the specifications. **⚠Caution** Please refer to the manual or the catalogue of the actuator for the method of operation of the actuator.
Over Temp. (1-146)	D	RESET SVON Input (*1)	**<Contents>** The temperature around the power element of the controller is too high. **<Countermeasure>** Make improvements so that the temperature around the controller is kept appropriate.
Over Crtl Vol (1-147)	D	RESET SVON Input (*1)	**<Contents>** The control power supply voltage within the controller is out of a range. **<Countermeasure>** Make sure that the voltage supplied to the control power (C24V) of the controller is appropriate. **⚠Caution** If one power supply is commonly used for the control power and the motor power, or the power supply is ”rush-current restraining type”, a power voltage drop may be caused due to a voltage drop during the acceleration/deceleration. **<Contents>** Also, a regenerative electric power may be generated to cause an alarm due to the method of operation of the actuator. **<Countermeasure>** Make sure that the operating conditions are within the specifications. **⚠Caution** Please refer to the manual or the catalogue of the actuator for the method of operation of the actuator.
Over load (1-148)	D	RESET SVON Input (*1)	**<Contents>** The output current accumulated value exceeds the specified value. **<Countermeasure>** Check whether the movement of the actuator is obstructed.Also confirm whether the actuator load, speed, acceleration and deceleration are within the specification range of the actuator.

Posn failed (1-149)	D	RESET SVON Input (*1)	**<Contents>** Failed to reach to the set position within the set time limit. **<Countermeasure>** Eliminate any obstructions that interfere with the actuator movement. Also, make sure that the load, speed, acceleration and deceleration are within the range of the actuators.
Ctrl Comm ALM (1-150)	D	RESET SVON Input (*1)	**<Contents>** The connection with the higher-level devices (such as the PC and teaching box) is disconnected. **<Countermeasure>** Make sure that the higher-level devices will not be disconnected during the actuator operation.
Encoder ALM (1-192)	E	Power off	**<Contents>** Abnormality in communication with the encoder. **<Countermeasure>** Check the connection of the actuator cable.
Phase Det ALM (1-193)	E	Power off	**<Contents>** Unable to find the motor phase within the set time. (When the servo motor is turned on (SVON is turned on) first time after the power is applied, the actuator needs to move a little to find the motor phase. However, if this actuator movement is prevented, this alarm will be activated.) **<Countermeasure>** Make sure there are no obstructions that interfere with the actuator movement and then, turn on the servo motor (SVON is turned on).
Over current (1-194)	E	Power off	**<Contents>** The output current of the power circuit is extraordinarily high. **<Countermeasure>** Make sure that there are no short circuits of actuator cables, connectors, etc. In addition, make sure that the actuator conforms to the controller.
I sens ALM (1-195)	E	Power off	**<Contents>** An abnormality is detected by the current sensor that is checked when the controller is reset. **<Countermeasure>** Make sure that the actuator conforms to the controller. Even after this measure, if the alarm regenerates when the power is reapplied, please contact SMC.
Err overflow (1-196)	E	Power off	**<Contents>** An overflow of the position error counter inside of the controller is occurred. **<Countermeasure>** Make sure there are no obstructions that interfere with the actuator movement. Also, make sure that the load, speed, acceleration and deceleration are within the range of the actuators.
Memory ALM (1-197)	E	Power off	**<Contents>** An error of the EEPROM is occurred. **<Countermeasure>** Please contact SMC.
CPU ALM (1-198)	E	Power off	**<Contents>** The CPU is not operating normally. (It is possible that the CPU or surrounding circuits is failed or a malfunction of the CPU is occurred due to an electric noise). **<Countermeasure>** If the alarm cannot be deactivated even after the power is reapplied, please contact SMC.

(*1) Alarm clear method for controller version below SV1.00: input RESET→SVON →SETUP

13. Wiring of cables/Common precautions

⚠**Warning**

1. **Adjusting, mounting or wiring change should never be done before shutting off the power supply to the product.**
   Electrical shock, malfunction and damaged can result.
2. **Never disassemble the cable. Use only specified cables.**
3. **Never connect or disconnect the cable or connector with power on.**

⚠**Caution**

1. **Wire the connector securely. Do not apply any voltage to the terminals other than those specified in the product Manual.**
2. **Wire the connector securely.**
   Check for correct connector wiring and polarity.
3. **Take appropriate measures against noise.**
   Noise in a signal line may cause malfunction. As a countermeasure, separate high voltage and low voltage cables, and shorten wiring lengths, etc.
4. **Do not route wires and cables together with power or high voltage cables.**
   The product can malfunction due to interference of noise and surge voltage from power and high voltage cables to the signal line. Route the wires of the product separately from power or high voltage cables.
5. **Take care that actuator movement does not catch cables.**
6. **Operate with cables secured. Avoid bending cables at sharp angles where they enter the product.**
7. **Avoid twisting, folding, rotating or applying an external force to the cable.**
   Risk of electric shock, wire break, contact failure and lost of control for the product can happen.
8. **Fix the motor cable protruding from the product in place before using.**
   The motor and lock cables are not robotic type cables and can be damaged when moved.Therefore do not place A part below it in a flexible moving tube.

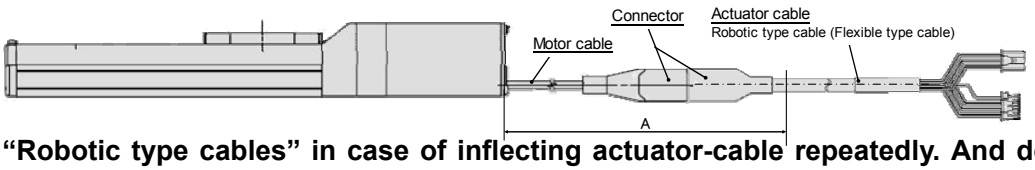

9. **Select "Robotic type cables" in case of inflecting actuator-cable repeatedly. And do not put cables into a flexible moving tube with a radius smaller than the specified value. (Min. 50mm).**

Risk of electric shock, wire break, contact failure and loss of control for the product can happen if "Standard cables" are used in case of inflecting the cables repeatedly.

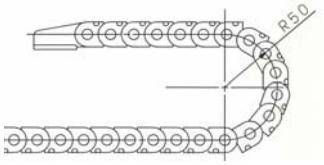

/**Confirm proper wiring of the product.**
Poor insulation (interference with other circuits, poor insulation between terminals and etc.) can apply excessive voltage or current to the product causing damage.

10. **The Speed / pushing force may vary, depending on the cable length, load and mounting conditions etc..**
    If the cable length exceeds 5m, the speed / pushing force will be reduced by a maximum of 10% per 5m. (If cable length is 15m: Maximum 20% reduction.)

[Transportation]

⚠**Caution**

1. **Do not carry or swing the product by the cable**

14. Electric actuators/Common precautions

14.1 Design and selection

⚠Warning

1. **Be sure to read the Operation Manual.**
   Handling or usage/operation other than that specified in the Operation Manual may lead to breakage and operation failure of the product.
   Any damage attributed to the use beyond the specifications is not guaranteed.
2. **There is a possibility of dangerous sudden action by the product if sliding parts of machinery are twisted due to external forces, etc.**
   In such cases, human injury may occur, such as by catching hands or feet in the machinery, or damage to the machinery itself may occur. Design the machinery should be designed to avoid such dangers.
3. **A protective cover is recommended to minimize the risk of personal injury.**
   If a driven object and moving parts of the product are in close proximity, personal injury may occur. Design the system to avoid contact with the human body.
4. **Securely tighten all stationary parts and connected parts so that they will not become loose.**
   When the product operates with high frequency or is installed where there is a lot of vibration, ensure that all parts remain secure.
5. **Consider a possible loss of power source.**
   Take measures to prevent injury and equipment damage even in the case of a power source failure.
6. **Consider behavior of emergency stop of whole system.**
   Design the system so that human injury and/or damage to machinery and equipment will not be caused, when it is stopped by a safety device for abnormal conditions such as a power outage or a manual emergency stop of whole system.
7. **Consider the action when operation is restarted after an emergency stop or abnormal stop of whole system.**
   Design the system so that human injury or equipment damage will not occur upon restart of operation of whole system.
8. **Disassembly and modification prohibited**
   Do not modify or reconstruct (including additional machining) the product. An injury or failure can result.
9. **Do not use stop signal,"EMG" of the controller and stop switch on the teaching box as the emergency stop of system.**
   The stop signal, "EMG" of controller and the stop switch on the teaching box are for decelerating and stopping the actuator.
   Design the system with an emergency stop circuit which is applied relevant safety standard separately.
10. **When using it for vertical application, it is necessary to build in a safety device.**
    The rod may fall due to the weight of work. The safety device should not interfere with normal operation of the machine.

⚠Caution

1. **Operate within the limits of the maximum usable stroke.**
   The product will be damaged if it is used with the stroke which is over the maximum stroke. Refer to the specifications of the product.
2. **When the product repeatedly cycles with partial strokes, operate it at a full stroke at least once every 10 strokes.**
   Otherwise, lubrication can run out.

3. **Do not use the product in applications where excessive external force or impact force is applied to it.**
   The product can be damaged.
4. **Refer to a common auto switch /matter (Best Pneumatics No 2) when an auto switch is built in and used.**
5. **Return to origin cannot return while operating.**
   It cannot be done during positioning operation, pushing operation and pushing.

14.2 Mounting

⚠**Warning**

1. **Install and operate the product only after reading the Operation Manual carefully and understanding its contents. Keep the manual in a safe place future reference.**
2. **Observe the tightening torque for screws.**
   Tighten the screws to the recommended torque for mounting the product.
3. **Do not make any alterations to this product.**
   Alterations made to this product may lead to a loss of durability and damage to the product, which can lead to human injury and damage to other equipment and machinery.
4. **When using external guide, the guide axis should be parallel to the actuator axis.**
   There will be damage/excessive wear on the lead screw if the external guide is not parallel.
5. **When an external guide is used, connect the moving parts of the product and the load in such a way that there is no interference at any point within the stroke.**
   Do not scratch or dent the sliding parts of the product tube or piston rod etc., by striking or grasping them with other objects. Components are manufactured to precise tolerances, so that even a slight deformation may cause faulty operation.
6. **Prevent the seizure of rotating parts.**
   Prevent the seizure of rotating parts (pins, etc.) by applying grease.
7. **Do not use the product until you verify that the equipment can be operated properly.**
   After mounting or repair, connect the power supply to the product and perform appropriate functional inspections to check it is mounted properly.
8. **At the overhang mounted impeller fixation**
   There is a possibility that the power at the bending moment damages the actuator when moving it at high speed.
   The support metal fittings that suppress the vibration of the main body of the actuator are installed.
   Lower and use speed for the state that the actuator doesn't vibrate.
9. **When attaching work piece, do not apply strong impact or large moment.**
   If an external force over the allowable moment is applied, it may cause looseness in the guide unit, an increase in sliding resistance or other problems.
10. **Maintenance space.**
    Allow sufficient space for maintenance and inspection.

14.3 Handling

⚠Warning

1. **Do not touch the motor while in operation.**
   The surface temperature of the motor can increase to approx. 90oC to 100oC due to operating conditions. Energizing alone may also cause this temperature increase. As it may cause burns, do not touch the motor when in operation.
2. **If abnormal heating, smoking or fire, etc., occurs in the product, immediately shut off the power supply.**
3. **Immediately stop operation if abnormal operation noise or vibration occurs.**
   If abnormal operation noise or vibration occurs, the product may have been mounted incorrectly. Unless operation of the product is stopped for inspection, the product can be seriously damaged.
4. **Never touch the rotating part of the motor or moving part of the actuator while in operation.**
5. **When installing, adjusting, inspecting or performing maintenance on the product, controller and related equipment, be sure to shut off the power supply to each of them. Then, lock it so that no one other than the person working can turn the power on, or implement measures such as a safety plug.**
6. **In the case of the actuator that has a servo motor (24VDC), the “motor phase detection step" is done by inputting the servo on signal just after the controller power is turned on. The “motor phase detection step” operates the table/rod to the maximum distance of the lead screw. (The motor rotates in the reverse direction if the table hits an obstacle such as the end stop damper.) Take the “motor phase detection step” into consideration for the installation and operation of this actuator.**

⚠Caution

1. **Keep the controller and product combined as delivered for use.**
   The product is set in parameters for shipment. If it is combined with a different parameter, failure can result.
2. **Check the product for the following points before operation.**
   a) Damage to electric driving line and signal lines
   b) Looseness of the connector to each power line and signal line
   c) Looseness of the actuator/cylinder and controller/driver mounting
   d) Abnormal operation
   e) Emergency stop of the total system
3. **When more than one person is performing work, decide on the procedures, signals, measures and resolution for abnormal conditions before beginning the work. Also, designate a person to supervise work other than those performing work.**
4. **Actual speed of the product will be changed by the workload.**
   Before selecting a product, check the catalog for the instructions regarding selection and specifications.
5. **Do not apply a load, impact or resistance in addition to a transferred load during return to origin.**
   In the case of the return to origin by pushing force, additional force will cause displacement of the origin position since it is based on detected motor torque.
6. **Do not remove the name plate.**
7. **Operation test should be done by low speed. Start operation by predefined speed after confirming there is no trouble.**

[Earth]

⚠Warning

1. **Please give the earth of the actuator.**
2. **Please make it to the earth of the exclusive use. The earth construction is D seed.**
   (Below earth resistance 100Ω)
3. **Please shorten the distance until the actuator and earth.**

[Unpackaging]

⚠**Caution**

1. **Check the received product is as ordered.**
   If a different product is installed from the one ordered, injury or damage can result.

14.4 Operating environment

⚠**Warning**

1. **Avoid use in the following environments.**
   a. Locations where a large amount of dusts and cutting chips are airborne.
   b. Locations where the ambient temperature is outside the range of the temperature specification (refer to specifications).
   c. Locations where the ambient humidity is outside the range of the humidity specification (refer to specifications).
   d. Locations where corrosive gas, flammable gas, sea water, water and steam are present.
   e. Locations where strong magnetic or electric fields are generated.
   f. Locations where direct vibration or impact is applied to the product.
   g. Areas that are dusty, or are exposed to splashes of water and oil drops.
   h. Areas exposed to direct sunlight (ultraviolet ray).
2. **Do not use in an environment where the product is directly exposed to liquid, such as cutting oils.**
   If cutting oils, coolant or oil mist contaminates the product, failure or increased sliding resistance can result.
3. **Install a protective cover when the product is used in an environment directly exposed to foreign matters such as dust, cutting chips and spatter.**
   Play or increased sliding resistance can result.
4. **Shade the sunlight in the place where the product is applied with direct sunshine.**
5. **Shield the valve from radiated heat generated by nearby heat sources.**
   When there is a heat source surrounding the product, the radiated heat from the heat source can increase the temperature of the product beyond the operating temperature range. Protect it with a cover, etc.
6. **Grease oil can be decreased due to external environment and operating conditions, and it deteriorates lubrication performance to shorten the life of the product.**

[Storage]

⚠**Warning**

1. **Do not store the product in a place in direct contact with rain or water drops or is exposed to harmful gas or liquid.**
2. **Store in an area that is shaded from direct sunlight and has a temperature and humidity within the specified range (-10oC to 60oC and 35 to 85% No condensation or freezing.**
3. **Do not apply vibration and impact to the product during storage.**

14.5 Maintenance

⚠**Warning**

1. **Do not disassemble or repair the product.**
   Fire or electric shock can result.
2. **Before modifying or checking the wiring, the voltage should be checked with a tester 5 minutes after the power supply is turned off.**
   Electrical shock can result.

⚠**Caution**

1. **Maintenance should be performed according to the procedure indicated in the Operating Manual.**
   Incorrect handling can cause injury, damage or malfunction of equipment and machinery.
2. **Removal of product.**
   When equipment is serviced, first confirm that measures are in place to prevent dropping of work pieces and run-away of equipment, etc, and then cut the power supply to the system. When machinery is restarted, check that operation is normal with actuators in the proper positions.

[Lubrication]

⚠**Caution**

1. **The product has been lubricated for life at manufacturer, and does not require lubrication in service.**
   Contact SMC if lubrication will be applied.

14.6 Precautions for actuator with lock

⚠**Warning**

1. **Do not use the lock as a safety lock or a control that requires a locking force.**
   The lock used for the product with a lock is designed to prevent dropping of work piece.
2. **For vertical mounting, use the product with a lock.**
   If the product is not equipped with a lock, the product will move and drop the work piece when the power is removed.
3. **"Measures against drops" means preventing a work piece from dropping due to its weight when the product operation is stopped and the power supply is turned off.**
4. **Do not apply an impact load or strong vibration while the lock is activated.**
   If an external impact load or strong vibration is applied to the product, the lock will lose it's holding force and damage to the sliding part of the lock or reduced lifetime can result. The same situations will happen when the lock slips due to a force over the thurst of the product, as this accelerates the wear to the lock.
5. **Do not apply liquid or oil and grease to the lock or its surrounding.**
   When liquid or oil and grease is applied to the sliding part of the lock, its holding force will reduce significantly.
6. **Take measures against drops and check that safety is assured before mounting, adjustment and inspection of the product.**
   If the lock is released with the product mounted vertically, a work piece can drop due to its weight.

15. Controller and its peripheral devices /Specific product precautions

15.1 Design and selection

⚠Warning

1. **Be sure to apply the specified voltage.**
   Otherwise, a malfunction and breakage of the controller may be caused.
   If the applied voltage is lower than the specified, it is possible that the load cannot be moved due to an internal voltage drop. Please check the operating voltage before use.
2. **Do not operate beyond the specifications.**
   It may cause a fire, malfunction or actuator damage can result. Please check the specifications before use.
3. **Install an emergency stop circuit.**
   Please install an emergency stop outside of the enclosure so that it can stop the system operation immediately and intercept the power supply.
4. **In order to prevent danger and damage due to the breakdown and the malfunction of this product, which may occur at a certain probability, a backup system should be established previously by giving a multiple-layered structure or a fail-safe design to the equipment, etc.**
5. **If a fire or danger against the personnel is expected due to an abnormal heat generation, ignition, smoking of the product, etc., cut off the power supply for this product and the system immediately.**

15.2 Handling

⚠Warning

1. **The inside of the controller and its connector should not be touched.**
   It may cause an electric shock or damage to the controller.
2. **Do not perform the operation or setting of this equipment with wet hands.**
   It may cause an electric shock.
3. **Product with damage or the one lacking of any components should not be used.**
   It may cause an electric shock, fire, or injury.
4. **Use only the specified combination between the controller and electric actuator.**
   It may cause damage to the controller or the actuator.
5. **Be careful not to be caught or hit by the workpiece while the actuator is moving.**
   It may cause an injury.
6. **Do not connect the power supply or power on the product before confirming the area where the work moves is safe.**
   The movement of the work may cause accident.
7. **Do not touch the product when it is energized and for some time after power has been disconnected, as it is very hot.**
   It may lead to a burn due to the high temperature.
8. **Check the voltage using a tester for more than 5 minute after power-off in case of installation, wiring and maintenance.**
   There is a possibility of getting electric shock, fire and injury.

9. **Do not use in an area where dust, powder dust, water or oil is in the air.**
   It will cause failure or malfunction.
10. **Do not use in an area where a magnetic field is generated.**
   It will cause failure or malfunction.
11. **Do not install in the environment of flammable gas, corrosive gas and explosive gas.**
   It could lead to fire, explosion and corrosion.
12. **Radiant heat from strong heat supplys such as a furnace, direct sunlight, etc. should not be applied to the product.**
   It will cause failure of the controller or its peripheral devices.
13. **Do not use the product in an environment subject to a temperature cycle.**
   It will cause failure of the controller or its peripheral devices.
14. **Do not use in a place where surges are generated.**
   When there are units that generate a large amount of surge around the product (e.g., solenoid type lifters, high frequency induction furnaces, motors, etc.), this may cause deterioration or damage to the product's' internal circuit. Avoid supplys of surge generation and crossed lines.
15. **Do not install this product in an environment under the effect of vibrations and impacts.**
   It will cause failure or malfunction.
16. **If this product is used with a relay or solenoid valve, they should be the surge absorbing element built-in type.**

15.3 Installation

⚠Warning

1. **The controller and its peripheral devices should be installed on a fire-proof material.**
   A direct installation on or near a flammable material may cause fire.
2. **Do not install this product in a place subject to vibrations and impacts.**
   It may cause an electric shock, fire, or injury.
3. **Take measure so that the operating temperature of this controller and its peripheral devices are within the range of the specifications. Also, this controller should be installed with 50mm or larger spaces between each side of it and the other structures or components.**
   It may cause a malfunction of the controller and its peripheral devices and a fire.
4. **Do not mount this controller and its peripheral devices together with a large-sized electromagnetic contactor or no-fuse breaker, which generates vibration, on the same panel. Mount them on different panels, or keep the controller and its peripheral devices away from such a vibration supply.**
5. **This controller and its peripheral devices should be installed on a flat surface.**
   If the mounting surface is distorted or not flat, an unacceptable force may be added to the housing, etc. to cause troubles.

15.4 Wiring of cables/Common precautions

⚠**Warning**

1. **Do not apply any excessive force to cables by repeated bending, tensioning or placing a heavy object on the cables.**
   It may cause an electric shock, fire, or breaking of wire.
2. **Connect wires and cables correctly.**
   Incorrect wiring could break he controller or its peripheral devices depending on the seriousness.
3. **Do not connect wires while the power is supplied.**
   It can break the controller or its peripheral devices could be damaged to cause a malfunction.
4. **Do not carry this product by holding its cables.**
   It may cause an injury or damage to the product.
5. **Do not connect power cable or high-voltage cable in the same wiring route as the unit.**
   Te wires to the controller or its peripheral devices can be interrupted with noise or induced surge voltage from power lines or high-voltage lines and malfunction could be caused.
   Separate the wiring of the controller and its peripheral device from that of power line and high voltage line.
6. **Verify the insulation of wiring.**
   Insulation failure (interference with other circuit, poor insulation between terminals and etc.) could introduce excessive voltage or current to the controller or its peripheral devices and damage them.

15.5 Power supply

⚠**Caution**

1. **Use a power supply that has low noise between lines and between power and ground.**
   In cases where noise is high, an isolation transformer should be used.
2. **The power supplys should be separated between the controller power and the I/O signal power and both of them do not use the power supply of "rush-current restraining type".**
   If the power supply is "rush-current restraining type", a voltage drop may be caused during the acceleration of the actuator.
3. **To prevent surges from lightning, an appropriate measure should be taken. Ground the surge absorber for lightning separately from the grounding of the controller and its peripheral devices.**

15.6 Grounding

⚠**Warning**

1. **Be sure to carry out grounding in order to ensure the noise tolerance of the controller.**
   It may cause an electric shock or fire.
2. **Dedicated grounding should be used.**
   Grounding should be to a D-class ground (Ground resistance of 100 Ω or less.)

3. **Grounding should be performed near the unit as much as possible to shorten the grounding distance.**
4. **In the unlikely event that malfunction is caused by the ground, it may be disconnected.**

15.7 Maintenace

⚠**Warning**

1. **Perform a maintenance check periodically**
   Confirm wiring and screws are not loose.
   Loose screws or wires may cause unintentional malfunction.
2. **Conduct an appropriate functional inspection after completing the maintenance.**
   In case of any abnormities (in the case that the actuator does no move, etc.), stop the operation of the system. Otherwise, an unexpected malfunction may occur and it will become impossible to secure the safety.
3. **Do not disassemble, modify or repair this controller and the peripheral equipment.**
4. **Do not put anything conductive or flammable inside of this controller.**
   It may cause a fire and explosion.
5. **Do not conduct an insulation resistance test and withstand voltage test on this product.**
6. **Ensure sufficient space for maintenance activities. Provide space required for maintenance.**
   Design the system that allows required space for maintenance.

16. Troubleshooting

In case of any troubles, please consult thefollowing table.

Consider replacing controller, if not of the causes on this table are applicable. It is possible that this product is damaged due to the operating conditions (applications), please contact SMC to discuss appropriate measures.

16.1 Operation trouble

Trouble	Possible cause	How to diagnose the trouble	Solutions
The actuator does not move at all.	Power fault	Check if the LED (green) of the controller is lit.	The power supply, voltage or current should be modified to an appropriate one. →4. External Wiring Diagram (page16) →5. CN1: Power supply plug (page 18)
	External device fault	Check if the PLC connected to the controller is working well. Test operation of the controller stand-alone.	Take appropriate measures according to this manual. → 6.3 The parallel I/O signal is detailed (page24)
	Wiring fault	Check if the controller is wired correctly according to this manual without any breakings and short circuits.	Correct the wiring so that the input/output of each signal is performed appropriately. Separate the power supply for the CN1controller power supply and the CN5 I/O signal power supply. → 4. External Wiring Diagram (page16) →6.4 Parallel I/O Wiring Example (page27)
	Alarm condition	Check if the controller is in the alarm condition. If it is, check the type of alarm referring to this manual.	Take appropriate measures according to this manual. → 12. Alarm Detection (page48)
	Lock release error	Check if you can hear the sound of lock release when the manual lock switch is turned on and off.	If there is no sound of lock release, the lock brake is possibly broken. → If the trouble continues, please contact SMC.
	Inappropriate specifications	Check if the controller's specifications are appropriate, the power supply is suitable and the actuator is compatible to the controller.	Check the actuator part number to replace with one of the appropriate ones compatible to the controller. → 3. Product Specifications (page11)
Move occasionally.	Alarm condition	Check if the controller is in the alarm condition. If it is, check the type of alarm referring to this manual.	Take appropriate measures according to this manual. →12. Alarm Detection (page48)
	Wiring fault	Check if the controller is wired correctly according to this manual without any break and short circuits.	Correct the wiring so that the input/output of each signal is performed appropriately. Separate the power supply for the CN1controller power supply and the CN5 I/O signal power supply. → 4. External Wiring Diagram (page16) →6.4 Parallel I/O Wiring Example (page27)
	Electric noise	Check if the grounding for the controller is appropriate. Also, check if the cables are not bundled.	Take appropriate measures according to this manual. → 3.4 How to install (page14)

Move occasionally.	Inappropriate parameter	Check if the parameters are appropriate. Check if the controller is compatible to the actuator.	Modify the parameters accordingly and check the operation. → 7. Setting Data Entry (page28)
	Voltage drop	Check if there are any temporary voltage drops for the power supply. (In case of a voltage drop, the EMG terminal of CN1 power connector will be turned off to put the actuator in an stop condition. However, this stop will be released when the voltage recovers.)	Replace the power supply. But do not use the power supply of “rush-current restraining type”.that has a sufficient capacity. → 3. Product Specifications (page11)
	The pushing operation defective.	Cheak during pushing operation the INP output signal is turning on. (On completion of pushing the operation the output INP signal is generated, the PLC cannot confirm the completion of driving.)	If the controller version is below SV1.00 The pushing force is reduced when the energy saving mode is turned on. If the pushing force is reduced to a value less than the value in step data “trigger LV” the INP output signal is turned off. Check the INPoutput signal before the energy savig mode is turned on. → 6.3 The parallel I/O signal is detailed. (page24)
	Inappropriate specifications	Check if the controller’s specifications are appropriate, the power supply is suitable and the controller is compatible to the actuator.	Check the actuator part number to replace with one of the appropriate ones compatible to the controller. → 3. Product Specifications (page11)
	Signal timing	Check the timing of the signal from the PLC to the controller.	PLC processing delay and controller scan delay are generated. Please ensure an interval of 15ms(30 ms if possible)or more between input signals, and maintain the signal state. → 8.4 Controller input signal response time (page 36)
Communication fault.(LEC-W1)	USB driver is not installed	Please confirm if the USB driver of the communication unit is installed.	Please install the USB driver of the communication unit. The USB driver's installation starts when the communication unit is connected with PC. The detail of the installation procedure is shown in "Installation procedure of the LEC-W1 setting software".
	Incorrect COM port setting	Please confirm if the correct COM port is set to the ACTController	The COM port allocated to the communication unit is different according to customer’s PC. Please confirm the COM port number with the PC communication unit connected.The COM port number can be checked by checking device manager in PC. Please confirm. The detail of the COM port checking method and setting method is shown in " Installation procedure of the LEC-W1 setting software " .
	Inappropriate connection	Please confirm the connection status.	Please confirm motor controller (LEC) = communications cable = communication unit = USB cable = PC is connected. As example, can not make the communication if the connector have been damaged. Please confirm the power supply of motor controller (LEC) has been turned on. The communication is not made if the Power supply is off. If the equipments (PLC and measurement hardware) except motor controller (LEC) is connected with PC. (There is a possibility that the communication with other equipment interferes in PC.)interferes in PC.)

16.2 Position/Speed trouble

Trouble	Possible cause	How to diagnose the trouble	Solutions
The actuator does not move to the correct position.	Incorrect origin position	If it is a pushing operation, repeat return to origin operations several times to check if the actuator returns to the origin correctly.	Take measure to make the actuator operates normally (remove foreign matters that interferes with the actuator movement, etc.)
	Inappropriate basic parameters	Check if the values for the parameter are appropriate and the program is correct. Review the maximum speed, the maximum acceleration and the maximum deceleration of the actuator.	Modify the parameters to appropriate ones and test the operation. → 7. Setting Data Entry (page28)
	Inappropriate specifications	Check if the controller's specifications are appropriate, the power supply is suitable and the controller is compatible to the actuator.	Take appropriate measures according to this manual. → 3. Product Specifications (page11)
The actuator does not move correctly.	Wiring fault	Check if the controller is wired correctly according to this manual without any breaks and short circuits	Correct the wiring so that the input/output of each signal is performed appropriately. Separate the power supply for the CN1 controller power supply and the CN5 I/O signal power supply. → 4. External Wiring Diagram (page16) →6.4 Parallel I/O Wiring Example (page27)
	Inappropriate specifications	Check if the controller's specifications are appropriate, the power supply is suitable and the controller is compatible to the actuator.	Take appropriate measures according to this manual. → 3. Product Specifications (page11)
	Signal timing	Check the timing of the signal from the PLC to the controller.	PLC processing delay and controller scan delay are generated. Please ensure an interval of 15ms(30 ms if possible) or more between input signals, and maintain the signal state. → 8.4 Controller input signal response time (page 36)
	Data writing failure	Check whether data (step data, parameter) is written correctly. Do not turn off the controller input power or remove the cable while data is being written (green light flashing).	Input correct data (step data, parameter) again and confirm operation. → 3.2 Parts description (page 12) → 7. Setting Data Entry (page 28)
Insufficient speed	Inappropriate basic parameters	Check if the values for the parameter are appropriate and the program is correct. Review the maximum speed and the maximum acceleration of the actuator.	Modify the values of the parameters to appropriate ones and test the operation. → 7. Setting Data Entry (page28)
	Inappropriate step data	Check if a trapisodial acceleration / deceleration is programmed for the actuator operation. In case of such operation, the actuator may start slowing down before it reaches the maximum speed.	Modify the setting to make the moving distance longer or the acceleration larger. → 7. Setting Data Entry (page28)
	Inappropriate specifications	Check if the controller's specifications are appropriate, the power supply is suitable and the controller is compatible to the actuator.	Take appropriate measures according to this manual. → 3. Product Specifications (page11)
	Voltage drop	Check if there has been any temporary voltage drop in the power supply. (If there is a temporary voltage drop in the power supply, the EMG terminal of CN1 power connector will turn OFF so the actuator will stop. However, this stop will be released when the voltage recovers.)	There is a possibility of a momentary voltage drop because the capacity of the power supply is insufficient, or the power supply has inrush current restraining specification. →3. Product Specifications (page 11)

Revision history
No.LEC-OM00601
Sep/2008 1st printing
No.LEC-OM00602
Apr/2009 Revision
No.LEC-OM00603
Apr/2010 Revision
No.LEC-OM00604
Jul/2011 Revision
Addition/Standard cable
Addition/Operation trouble
Addition/Timing chart

SMC Corporation

4-14-1, Sotokanda, Chiyoda-ku, Tokyo 101-0021 JAPAN

Tel: + 81 3 5207 8249 Fax: +81 3 5298 5362

URL http://www.smcworld.com

Note: Specifications are subject to change without prior notice and any obligation on the part of the manufacturer.

© 2011 SMC Corporation All Rights Reserved